Backstage Catalog '19

1st edition

Index

Terms and Conditions 126

Carts (Grip & Lighting)
4 x 4 Coaster Junior Cart 60
4 x 4 Coaster Senior Cart 59
4 x 4 Grande Cart 58
4 x 4 Mini Cart 14
Apple Box Cart Cart 32
Apple Box Cart Plus 33
Baby Stand Cart 31
Baby Stand Mini Cart 16
Blackbird Stand Cart (American) 95
Cable Distro Cart 42
Cable Distro Mini Cart 5
Cable/Sand Bag Cart 39
Cable/Sand Bag Cart (Foldable) 40
Cable/Sand Bag Mini Cart 6
Cable/Sand Bag Mini Cart (Foldable) 7
Cable Cross-Over Cart 45
Combo Stand Cart 30
Combo Stand Mini Cart 15
Combo/Hi-Roller Junior Cart 54
Combo/Hi-Roller Senior Cart 53
C-Stand Cart 46
C-Stand Plus Cart 47
C-Stand Cart (Collapsible) 48
C-Stand/Combo Utility Cart 55
C-Stand Mini Cart 9
C-Stand Mini Cart (Modular) 10-11
C-Stand/Hi-Roller Utility Cart 51
C-Stand/Hi-Roller Utility Cart Plus 52
C-Stand Self Stabilizing Magliner Carts 49-50
Electric Cart 24
Electric Mini Cart 3
EZ-Load Cart 63
Grip Junior Cart 62
Grip Senior Cart 61
Head Cart 34
Head Cart Mini Cart 8
Head Cart Plus Cart 35
HMI Cart 36
HMI Mini Cart 18
Kino-Flo Cart 25
Kino-Flo Mini Cart 4
Long John Silver Stand Carts (Avenger) 88-89
Muscle Cart 41
SkyPanel 60 Mini Cart 12-13
SkyPanel 120 Cart 26-27
SkyPanel 360 (Dual) Cart 28
SkyPanel 360 (Single) Cart 29
Speed Rail Cart 57
Stinger Cart 44
Stratto Safe B-150 Stand Cart (Avenger) 93
Stratto Safe B-150P Stand Cart (Avenger) 94
Super Duz-All Cart 56
Super Duz-All Mini Cart 17
Tube & Plywood Track Cart 64
Universal Junior Cart 37
Universal Senior Cart 38
Utility Plywood/Track Cart 65
Whip Distro Cart 43

Carts (Prop & Craft Service)
Craft Service Cabana Caddie Cart 81
Craft-Service Cart 80
Prop Cart 75
Prop & Ammo Cart 76
Prop & Crate Cart 77
Prop & Crate Mini Cart 23
Prop Large Cart 78
Prop-Chair Cart 79

Carts (Set Box)
Ditty Cart Cart 66
4-Crate Set Box Horizontal Cart 68
4-Crate Set Box Mini Cart 19
4-Crate Set Box Vertical Cart 67
6-Crate Set Box Horizontal Cart 70
6-Crate Set Box Vertical Cart 69
6-Crate Set Box Mini Cart 20
7-Crate Set Box Cart 71
7-Crate Set Box Mini Cart 21
8-Crate Set Box Cart 73
9-Crate Set Box Cart 72
9-Crate Set Box Mini Cart 22
Wood Work Box Cart 74

Carts (Misc.)
Big Wheels 99
Dolly Parts Caddies 83-87
Generator Armor Carts 100-101
Lamp Dollies 97-98
Lead Weight Carts 89-90
Shot Bag Cart 88

Camera, Sound, DIT, Video & Steadi-Cam Carts
Camera Case Carts (TR-04, TR-04 JR) 103-107
Flight Case Carts 109-113
Monitor Mover Cart 82
Rubbermaid Carts 114
Steadi-Cam Cart 108
Transformer Carts (TR-01, TR-01 8, TR-01 EFX) .. 115-122

Camera Dollies
Action Dolly 123-124
Shotsaver Dolly 125

Grip & Electric Cart Equipment
Gel Holders 102
Milk Crates 102
Milk Crate Liners 102
Net Baskets 102

*** New products listed in bold type**

Electric Mini Cart

Part No. E-01 MINI

Sale Price: $ 1,825.00
Material: Steel
Color: Black Hammertone
Max. Capacity: 1,000 lbs. / 454 kgs.
Weight: 163 lbs. / 74 kgs.
Dimensions: L48" x W21 1/4" x H51 1/2"
L122cm x W54cm x H131cm

NOTE: Milk Crates not included

Features:
- Holds up to 24 Baby S tands or 18 Combo S tands with optional S tand Holders
- 3 Sliding Milk Crate Compartments
- Top Tray (D19 1/4” x W13 5/8” x H1 1/2” / D48.9cm x W34.6cm x H3.8cm)
- Jockey Box Holds (1) Half Milk Crate
- End Pans (D19 1/4” x W13 3/16” / D48.9cm x W33.5cm)
- Wheels: (2) 10” Swivel Casters & (2) 10” Rigid Casters
- Foot Brake

Accessories:
- Baby Stand Holder (Holds 4 Stands) **(MINI ES-4)** $ 60.00
- Combo Stand Holder (Holds 3 Stands) **(MINI CS-3)** $ 60.00

Options:
- Milk Crate **(B-03)** $ 20.00
- Half Milk Crate **(B-05)** $ 20.00
- Full Milk Crate Liner **(B-04)** $ 12.50
- Half Milk Crate Liner **(B-06)** $ 12.00
- Foam Filled Tires **(WA-10 FOAM CTR)** $ 196.00

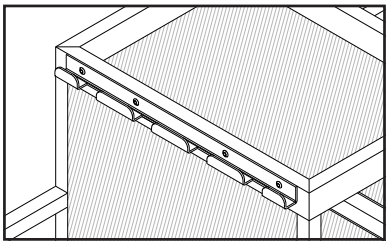

Electric Stand Holder accessory mounted on cart.

Replacement parts:
- 10” Pneumatic Tire **(WA-10 TIRE)** $ 23.00
- 10” Pneumatic Tube **(WA-10 TUBE)** $ 8.75
- 10” Pneumatic Rigid Caster Wheel **(W-10 RCX)** $ 59.50
- 10” Pneumatic Swivel Caster Wheel **(W-10 SCX)** $ 65.00

Shipping Dimensions: L49” x W22” x H57” (213 lbs.)
L125cm x W56cm x H145cm (97 kgs.)

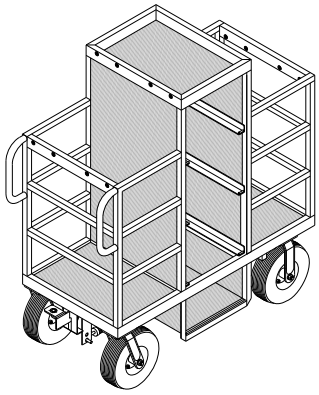

Rear view image of E-01 MINI Cart

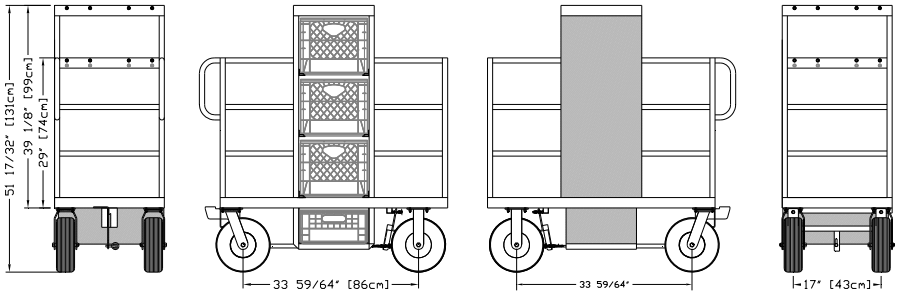

Kino-Flo Mini Cart

Part No. E-09 MINI

NOTE: Milk Crates not included

Sale Price: $ 1,700.00
Material: Steel
Color: Black Hammertone
Max. Capacity: 1,000 lbs. / 454 kgs.
Weight: 173 lbs. / 79 kgs.
Dimensions: L48" x W21 1/4" x H51 1/2"
L122cm x W54cm x H131cm

Features:
- Holds up to (12) 4 Foot 4-Bank Kinoflo Fixtures
- Holds up to (12) Baby or 9 Combo S tands with optional S tand Holders
- 3 Sliding Milk Crate Compartments
- Top Tray (D19 1/4" x W13 5/8" x H1 1/2" / D48.9cm x W34.6cm x H3.8cm)
- Jockey Box Holds (1) Half Milk Crate
- End Pan (D19 1/4" x W27 3/8" / D48.9cm x W69.5cm)
- Wheels: (2) 10" Swivel Casters & (2) 10" Rigid Casters
- Foot Brake

Accessories:
- Baby Stand Holder (Holds 4 Stands) **(MINI ES-4)** $ 60.00
- Combo Stand Holder (Holds 3 S tands) **(MINI CS-3)** $ 60.00

Options:
- Milk Crate **(B-03)** $ 20.00
- Half Milk Crate **(B-05)** $ 20.00
- Full Milk Crate Liner **(B-04)** $ 12.50
- Half Milk Crate Liner **(B-06)** $ 12.00
- Foam Filled Tires **(WA-10 FOAM CTR)** $ 196.00

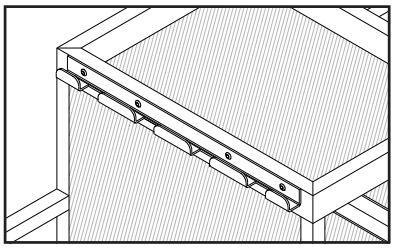

Electric Stand Holder accessory mounted on cart.

Replacement parts:
- 10" Pneumatic Tire **(WA-10 TIRE)** $ 23.00
- 10" Pneumatic Tube **(WA-10 TUBE)** $ 8.75
- 10" Pneumatic Rigid Caster Wheel **(W-10 RCX)** $ 59.50
- 10" Pneumatic Swivel Caster Wheel **(W-10 SCX)** $ 65.00

Shipping Dimensions: L49" x W22" x H57" (223 lbs.)
L125cm x W56cm x H145cm (101 kgs.)

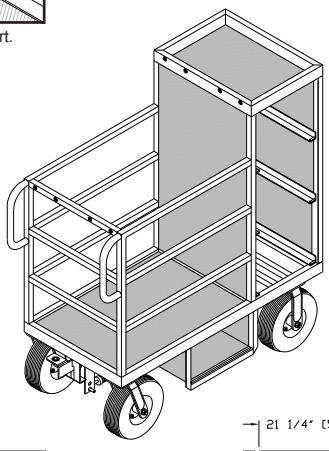

Rear view image of E-09 MINI Cart

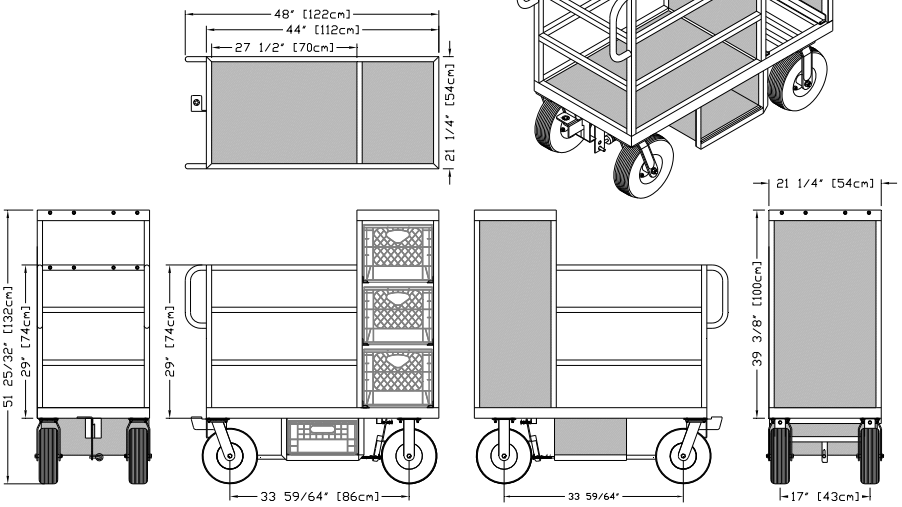

Backst age Equipment, Inc. Toll Free (800) 692-2787 • Tel (818) 504-6026 • Fax (818) 504-6180 • info@backstageweb.com • www.backstageweb.com

Cable Distro Mini Cart

Part No. GE-03 MINI

Sale Price: $ 1,650.00
Material: Steel
Color: Black Hammertone
Max. Capacity: 1,000 lbs. / 454 kgs.
Weight: 151 lbs. / 69 kgs.
Dimensions: L48" x W21 1/4" x H44 1/2"
L122cm x W54cm x H113cm

NOTE: Milk Crates not included

Features:
- Holds Milk Crates, Cable, Sand Bags, Ballasts
- (2) Stationary Shelves (D20 7/8" x W40" / D53cm x W101.6cm)
- Jockey Box Holds (1) Half Milk Crate
- Wheels: (2) 10" Swivel Casters & (2) 10" Rigid Casters
- Foot Brake

Accessories:

Options:
- Milk Crate **(B-03)** $ 20.00
- Half Milk Crate **(B-05)** $ 20.00
- Full Milk Crate Liner **(B-04)** $ 12.50
- Half Milk Crate Liner **(B-06)** $ 12.00
- Foam Filled Tires **(WA-10 FOAM CTR)** $ 196.00

Replacement parts:
- 10" Pneumatic Tire **(WA-10 TIRE)** $ 23.00
- 10" Pneumatic Tube **(WA-10 TUBE)** $ 8.75
- 10" Pneumatic Rigid Caster Wheel **(W-10 RCX)** $ 59.50
- 10" Pneumatic Swivel Caster Wheel **(W-10 SCX)** $ 65.00

Shipping Dimensions: L49" x W22" x H50" (201 lbs.)
L125cm x W56cm x H127cm (91 kgs.)

Rear view image of GE-03 MINI Cart

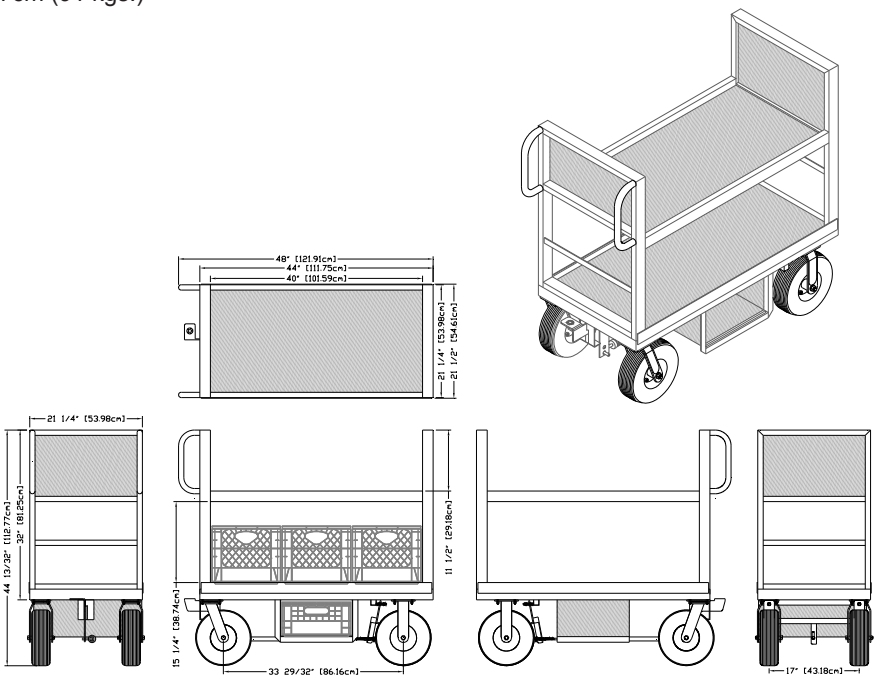

Cable/Sand Bag Mini Cart

Part No. GE-02 MINI

Sale Price: $ 850.00
Material: Steel
Color: Black Hammertone
Max. Capacity: 1,000 lbs. / 454 kgs.
Weight: 82 lbs. / 37.3 kgs.
Dimensions: L41 1/8" x W24 5/8" x H43 1/4"
L122cm x W54cm x H151cm

Features:
- Holds Cable and Sandbags
- Carriage Base (D19 1/2" x W16" / D49.5cm x W40.6cm)
- (4) 10" Pneumatic Offset Wheels
- Hand Brake

Accessories:

Options:
- Foam Filled Tires **(WA-10 FOAM OS)** $ 196.00

Replacement parts:
- 10" Pneumatic Tire **(WA-10 TIRE)** $ 23.00
- 10" Pneumatic Tube **(WA-10 TUBE)** $ 8.75
- 10" Pneumatic Offset Wheel **(W-10 OS34X)** $ 47.50
- 3/4" Sealed Bearing **(WA-34 BR)** $ 2.75 (Need (2) per Wheel)

Shipping Dimensions: L50" x W25" x H33" (122 lbs.)
L127cm x W63.5cm x H83.8cm (55.5 kgs.)

Rear view image of GE-02 MINI Cart

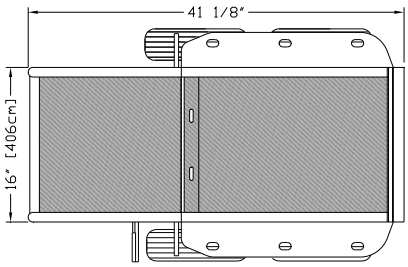

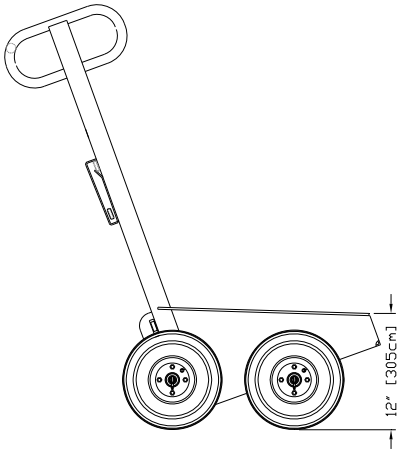

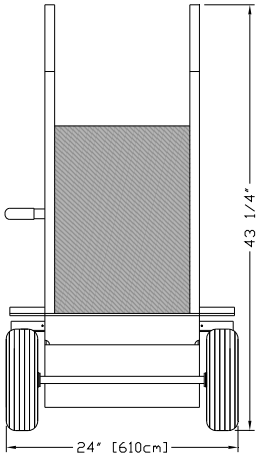

Backstage Equipment, Inc. Toll Free (800) 692-2787 • Tel (818) 504-6026 • Fax (818) 504-6180 • info@backstageweb.com • www.backstageweb.com

Cable/Sand Bag Mini Cart (Foldable)

Part No. GE-02 MINI FD

Sale Price: $ 1,010.00
Material: Steel
Color: Black Hammertone
Max. Capacity: 1,000 lbs. / 454 kgs.
Weight: 98 lbs. / 44.6 kgs.
Dimensions: L39 1/2" x W24 1/2" x H43 1/2"
L100cm x W62cm x H110cm
L34 1/2" x W24 1/2" x H20 1/4" (Folded)
L88cm x W62cm x H51cm (Folded)

Features:
- Folds to a compact size (Folding mechanism uses Quick ReleaseAircraft Pins to lock system into place)
- Holds Cable and Sandbags
- Carriage Base (D18 1/2" x W16" / D47cm x W40.6cm)
- (4) 10" Pneumatic Offset Wheels
- Hand Brake

Accessories:

Options:
- Foam Filled Tires **(WA-10 FOAM OS)** $ 196.00

Replacement parts:
- 10" Pneumatic Tire **(WA-10 TIRE)** $ 23.00
- 10" Pneumatic Tube **(WA-10 TUBE)** $ 8.75
- 10" Pneumatic Offset Wheel **(W-10 OS34X)** $ 47.50
- 3/4" Sealed Bearing **(WA-34 BR)** $ 2.75 (Need (2) per Wheel)

Shipping Dimensions: L26" x W22" x H36" (115 lbs.)
L65cm x W55cm x H91.4cm (52 kgs.)

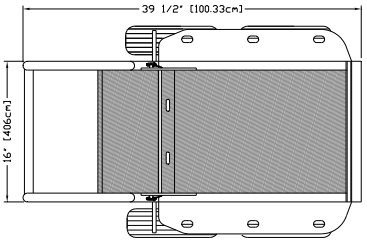

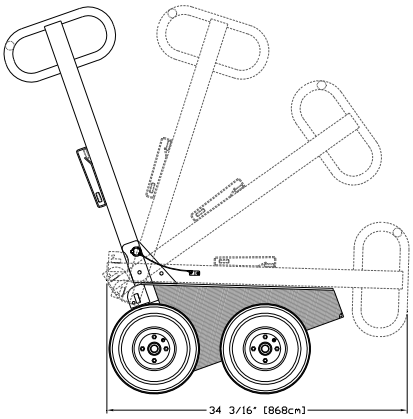

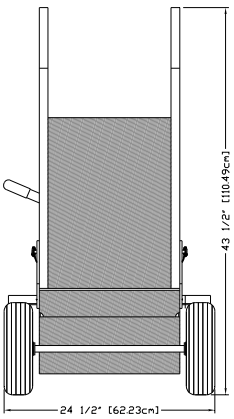

Head Mini Cart

Part No. E-02 MINI

Sale Price: $ 1,830.00
Material: Steel / Aluminum
Color: Black Hammertone
Max. Capacity: 1,000 lbs. / 454 kgs.
Weight: 155 lbs. / 70.5 kgs.
Dimensions: L48" x W21 1/4" x H59 3/8"
L122cm x W54cm x H151cm

Features:
- Holds up to 16 Electric S tands or 12 Combo S tands with optional S tand Holders
- 3 Shelves (L42" x W21 1/4" / 107cm x W54cm) 1 Stationary, 2 Adjustable (Aluminum
- Jockey Box Holds (1) Half Milk Crate
- Wheels: (2) 10" Swivel Casters & (2) 10" Rigid Casters
- Foot Brake

Accessories:
- Baby Stand Holder (Holds 4 Stands) **(MINI ES-4)** $ 60.00
- Combo Stand Holder (Holds 3 S tands) **(MINI CS-3)** $ 60.00
- Rear Baby/Combo Stand Holder Bracket **(MINI HOLDER-8)** $ 95.00
- Additional Adjustable Shelf **(E-02 MINI SHELF)** $ 297.00

NOTE: Milk Crates not included

Options:
- Milk Crate **(B-03)** $ 20.00
- Half Milk Crate **(B-05)** $ 20.00
- Full Milk Crate Liner **(B-04)** $ 12.50
- Half Milk Crate Liner **(B-06)** $ 12.00
- Foam Filled Tires **(WA-10 FOAM CTR)** $ 196.00

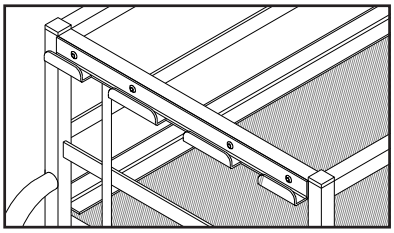

Electric Stand Holder accessory mounted on cart.

Replacement parts:
- 10" Pneumatic Tire **(WA-10 TIRE)** $ 23.00
- 10" Pneumatic Tube **(WA-10 TUBE)** $ 8.75
- 10" Pneumatic Rigid Caster Wheel **(W-10 RCX)** $ 59.50
- 10" Pneumatic Swivel Caster Wheel **(W-10 SCX)** $ 65.00

Shipping Dimensions: L49" x W22" x H65" (218 lbs.)
L125cm x W56cm x H165cm (99 kgs.)

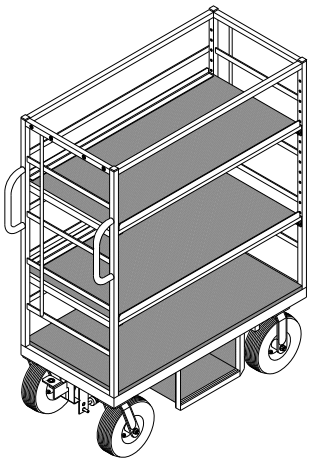

Rear view image of E-02 MINI Cart

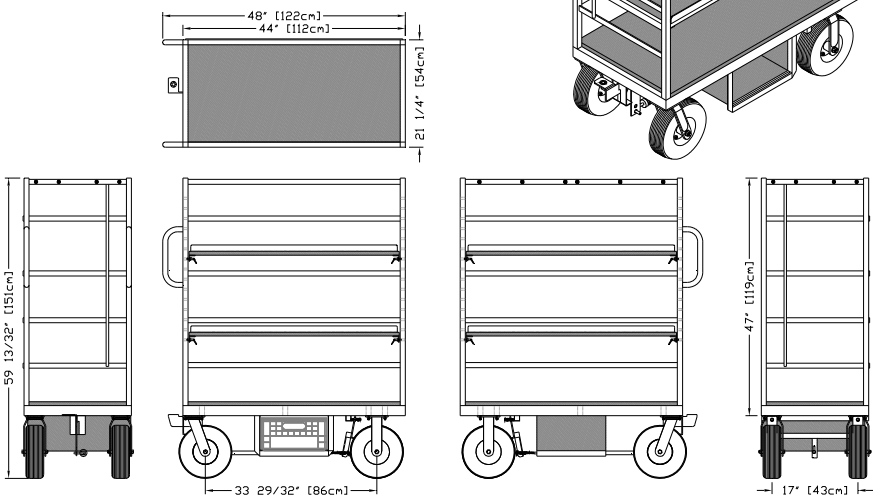

Backst age Equipment, Inc. Toll Free (800) 692-2787 • Tel (818) 504-6026 • Fax (818) 504-6180 • info@backstageweb.com • www.backstageweb.com

C-Stand Mini Cart

Part No. GE-13 MINI

Sale Price: $ 1,755.00
Material: Steel
Color: Black Hammertone
Max. Capacity: 1,000 lbs. / 454 kgs.
Weight: 101 lbs. / 46 kgs.
Dimensions: L27 13/16" x W25" x H60 3/8"
L70.6cm x W63.5cm x H153.4cm

NOTE: Milk Crates not included

Features:
- Holds up to 13 C-Stands
- Holds (2) Milk Crates
- Holds (4) C-Stand Gobo Head and Arms
- Holds Sand Bags
- Wheels: (2) 10" Pneumatic Offset Wheels & (2) 8" Swivel Casters
- Hand Brake

Accessories:

Options:
- Milk Crate **(B-03)** $ 20.00
- Full Milk Crate Liner **(B-04)** $ 12.50
- Foam Filled Tires **(WA-10 FOAM OS and WA-08 FOAM CTR)** $ 184.00

Replacement parts:
- 8" Pneumatic Tire **(WA-08 TIRE)** $ 18.00
- 8" Pneumatic Tube **(WA-08 TUBE)** $ 8.00
- 8" Pneumatic Swivel Caster Wheel **(W-08 SCX)** $ 51.00
- 10" Pneumatic Tire **(WA-10 TIRE)** $ 23.00
- 10" Pneumatic Tube **(WA-10 TUBE)** $ 8.75
- 10" Pneumatic Offset Wheel **(W-10 OS34X)** $ 47.50

Shipping Dimensions: L60" x W26" x H33" (151 lbs.)
L152.4cm x W66cm x H83.8cm (69 kgs.)

Rear view image of GE-13 MINI Cart

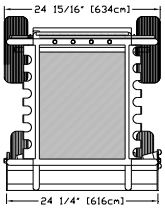

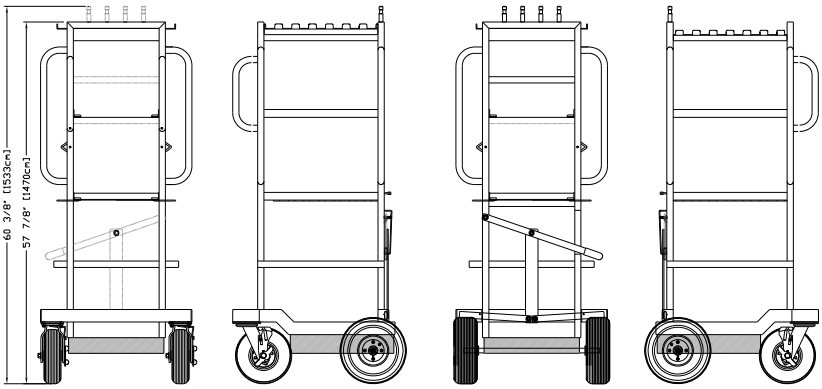

C-Stand Mini Cart (Modular)

Part No. GE-19 MINI

New

Sale Price: $ 1,645.00
Material: Steel
Color: Black Hammertone
Max. Capacity: 1,000 lbs. / 454 kgs.
Weight: 99 lbs. / 45 kgs.
Dimensions: L27 13/16" x W25" x H60 3/8"
L70.6cm x W63.5cm x H153.4cm

Note: Cart does not include any of the optional stand holders or 5/8" Baby Pins shown, you must order these accessories separately depending on your needs.

GE-19 MINI-X Shown with optional C-Stand Holders

Features:
- Holds up to 13 C-Stands or (8) Combo Stands or (11) Baby Stands or you may combine different Stand Holders depending on your needs
- Holds (2) Milk Crates
- Holds (4) C-Stand Gobo Head and Arms
- Holds Sand Bags
- Wheels: (2) 10" Pneumatic Offset Wheels & (2) 8" Swivel Casters
- Hand Brake

Accessories:
- C-Stand Holder Set Right Side **(GE-19 MINI CS-RX)** $ 135.00 (Holds (7) C-Stands)
- C-Stand Holder Set Left Side **(GE-19 MINI CS-LX)** $ 135.00 (Holds (6) C-Stands)
- Combo Stand Holder **(MINI CS-3)** $ 60.00 (Holds (3) Combo Stands)
- Combo Stand Holder **(MINI CS-2)** $ 49.00 (Holds (2) Combo Stands)
- Baby Stand Holder **(MINI ES-4)** $ 60.00 (Holds (4) Baby Stands)
- Baby Stand Holder **(MINI ES-3)** $ 49.00 (Holds (3) Baby Stands)
- 5/8" Baby Pin **(MAG-NP PIN)** $ 13.00

GE-19 MINI-X Shown with optional Baby Stand Holders

Options:
- Milk Crate **(B-03)** $ 20.00
- Full Milk Crate Liner **(B-04)** $ 12.50
- Foam Filled Tires **(WA-10 FOAM OS and WA-08 FOAM CTR)** $ 184.00

Replacement parts:
- 8" Pneumatic Tire **(WA-08 TIRE)** $ 18.00
- 8" Pneumatic Tube **(WA-08 TUBE)** $ 8.00
- 8" Pneumatic Swivel Caster Wheel **(W-08 SCX)** $ 51.00
- 10" Pneumatic Tire **(WA-10 TIRE)** $ 23.00
- 10" Pneumatic Tube **(WA-10 TUBE)** $ 8.75
- 10" Pneumatic Offset Wheel **(W-10 OS34X)** $ 47.50

Shipping Dimensions: L60" x W26" x H33" (149 lbs.)
L152.4cm x W66cm x H83.8cm (67.7 kgs.)

GE-19 MINI-X Shown with optional Combo Stand Holders

C-Stand Mini Cart (Modular)

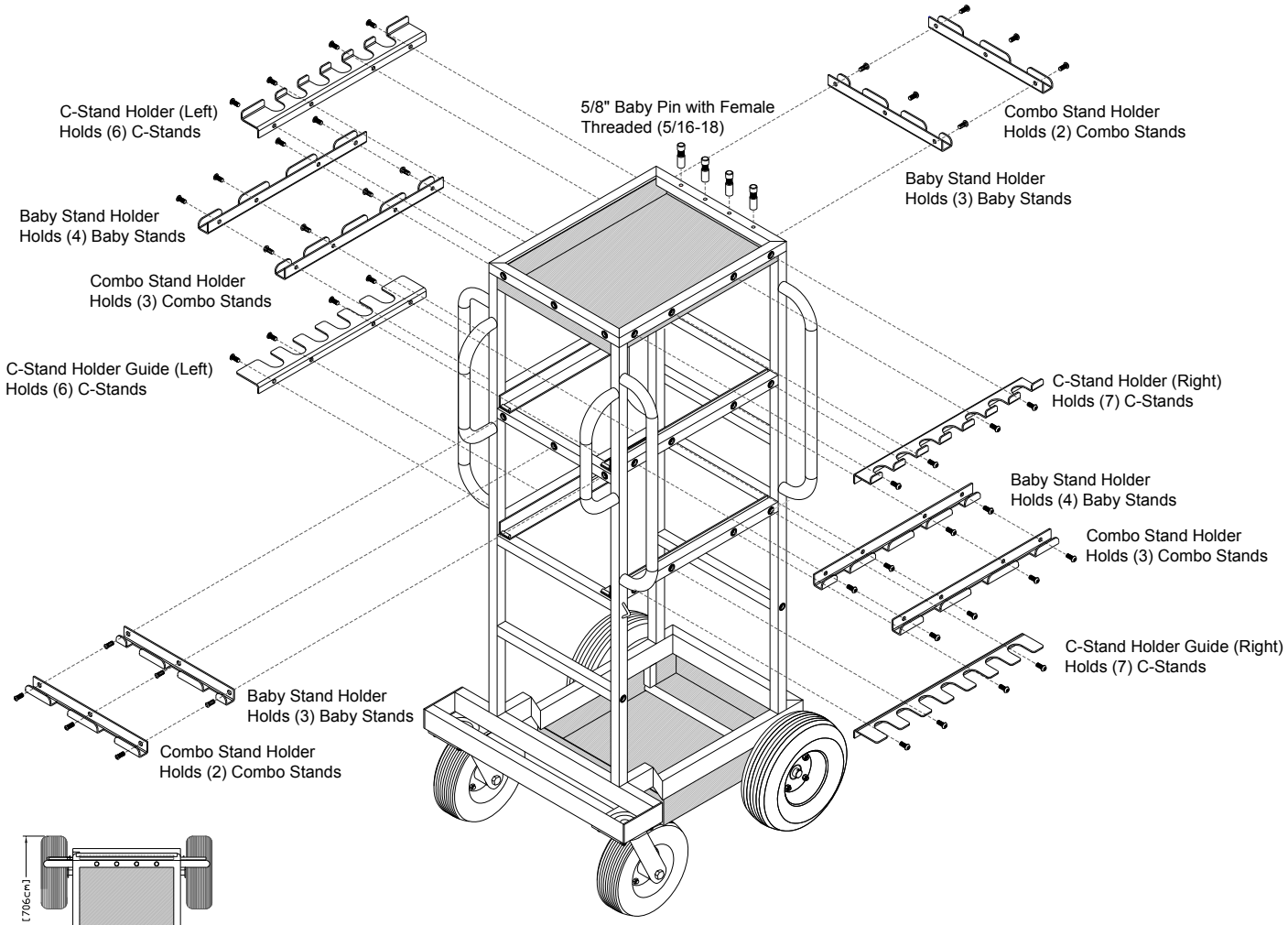

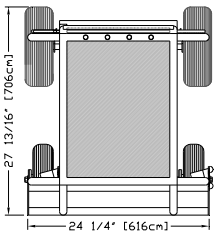

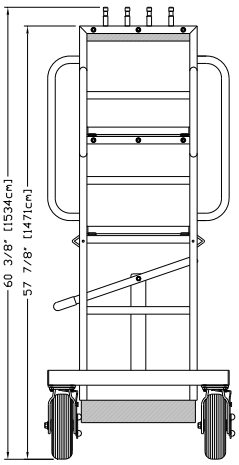

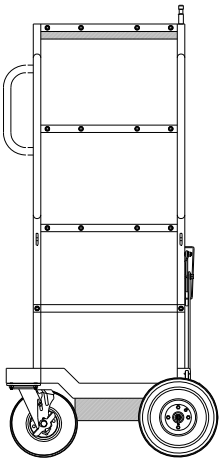

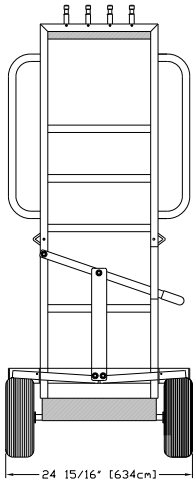

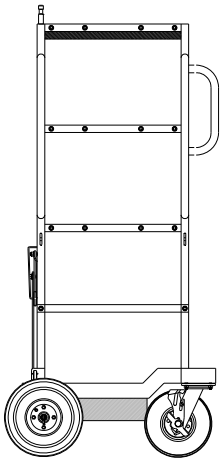

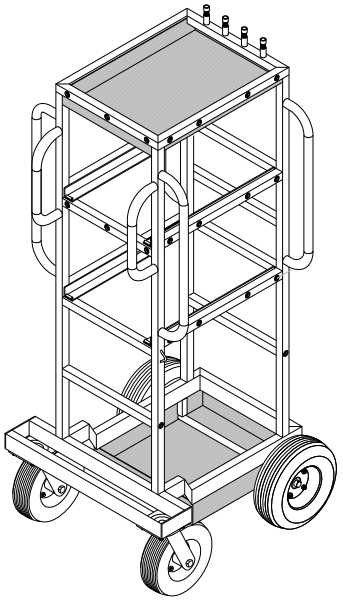

SkyPanel 60 Mini Cart

Part No. E-18 MINI

New

Sale Price: $ 2,650.00
Material: Steel
Color: Black Texture
Max. Capacity: 1000 lbs. /454.6 kgs.
Weight: 273 lbs. / 124 kgs.
Dimensions: L48" x W21 1/4" x H51 1/4"
L122cm x W54cm x H130.2cm

Features:
- All Steel Construction
- Accommodates up to five (5) SkyPanel 60 or 30 Fixtures
- Accommodates up to five (5) Power Supplies and Cables
- Accommodates three (3) Ful Size Milk Crates
- "D" Style Push / Pull Handles
- Wheels: (2) 10" Swivel Casters & (2) 10" Rigid Casters
- Jockey Box Holds (1) Half Milk Crate
- Locking Bars (2) keep SkyPanels secured in cart
- Foot Brake

Accessories:

Options:
- Full Milk Crate **(B-03)** $ 20.00
- Half Milk Crate **(B-05)** $ 20.00
- Full Milk Crate Liner **(B-04)** $ 12.50
- Half Milk Crate Liner **(B-06)** $ 12.00
- Foam Filled Tires (4) **(WA-10 FOAM CTR)** $ 196.00

Replacement parts:
- 10" Pneumatic Tire **(WA-10 TIRE)** $ 23.00
- 10" Pneumatic Tube **(WA-10 TUBE)** $ 8.75
- 10" Pneumatic Rigid Caster Wheel **(W-10 RCX)** $ 59.50
- 10" Pneumatic Swivel Caster Wheel **(W-10 SCX)** $ 65.00
- Front Locking Bar **(E-18 MINI D)** $ 47.50
- Rear Locking Bar **(E-18 MINI E)** $ 52.00

Shipping Dimensions: L49" x W22" x H57" (300 lbs.) Includes Pallet
L124.5cm x W55.9cm x H144.8cm (136.4 kgs.)

Backst age Equipment, Inc. Toll Free (800) 692-2787 • Tel (818) 504-6026 • Fax (818) 504-6180 • info@backstageweb.com • www.backstageweb.com

SkyPanel 60 Mini Cart (Cont.)

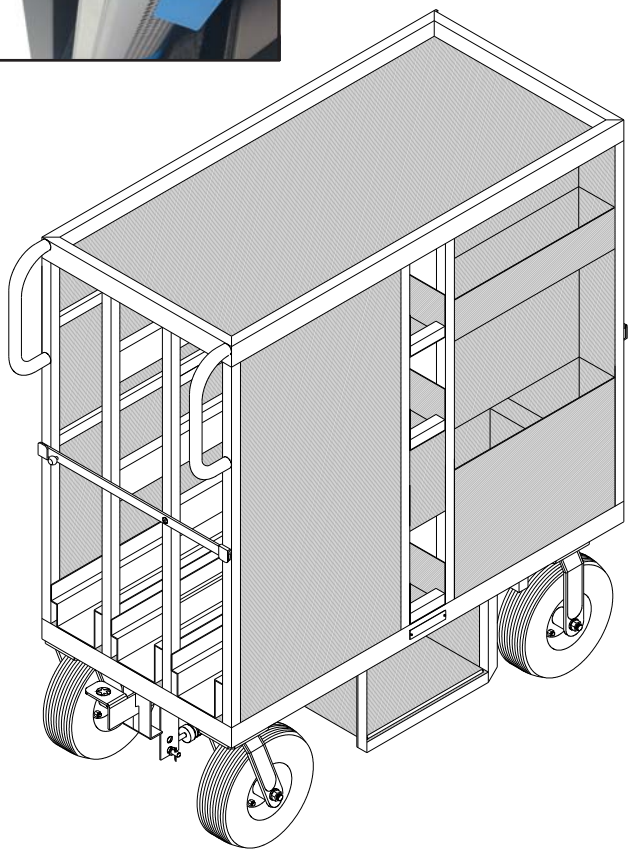

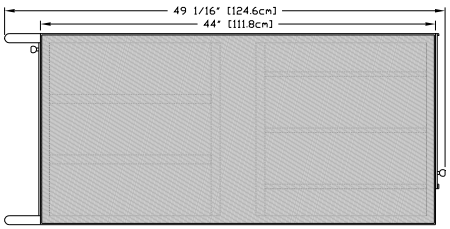

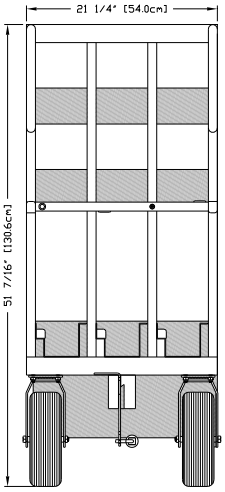

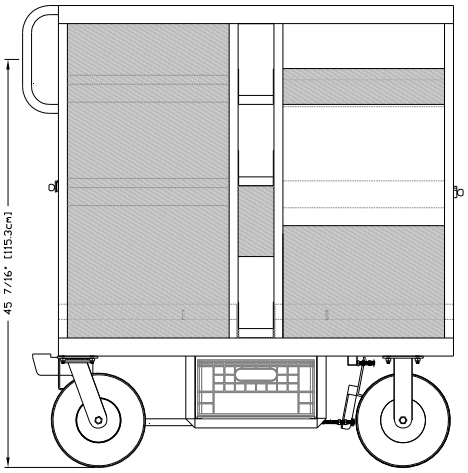

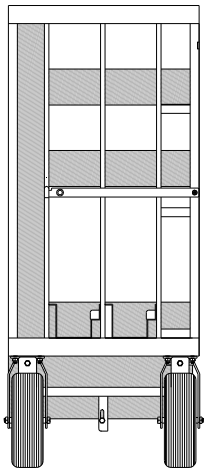

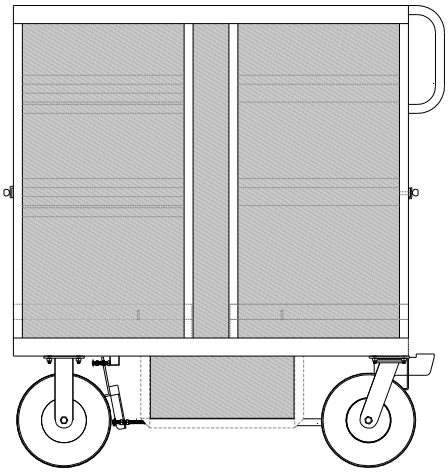

4 x 4 Mini Cart

Part No. G-01 MINI

Sale Price: $ 1,325.00
Material: Steel
Color: Black Hammertone
Max. Capacity: 800 lbs. / 364 kgs.
Weight: 137 lbs. / 62 kgs.
Dimensions: L55" x W21" x H63"
L139.7cm x W53.3cm x H160cm

Features:
- Holds (28) 4 x 4 Flags
- Holds (2) Full Size Reflector Boards
- Top Gel Storage Pan (L51 3/4" x W20 3/4" / L131.5cm x W52.7cm)
- Wheels: (2) 8" Swivel Casters with Brake & (2) 8" Rigid Wheels

Accessories:
- Net Basket (18" x 24") (46cm x 61cm) Double **(B-01D)** $ 350.00
- Net Basket (24" x 36") (61cm x 92cm) Double **(B-02D)** $ 405.00
- Net Basket (24" x 36") (61cm x 92cm) Triple **(B-02T)** $ 425.00
- Net Basket (24" x 36") (61cm x 92cm) Triple Mobile **(B-02T MOB)** $ 495.00
- Gel Holder Detachable Rack (Holds (16) Gels) **(GEL G-01)** $ 265.00

Options:
- Foam Filled Tires **(WA-08 FOAM CTR)** $ 172.00

Replacement parts:
- 8" Pneumatic Tire **(WA-08 TIRE)** $ 18.00
- 8" Pneumatic Tube **(WA-08 TUBE)** $ 8.00
- 8" Pneumatic Rigid Caster Wheel **(W-08 RCX)** $ 48.00
- 8" Pneumatic Swivel Caster Wheel with Brake **(W-08 SCBRX)** $ 53.50

Shipping Dimensions: L56" x W22" x H68" (187 lbs.)
L142.2cm x W55.9cm x H172.7cm (85 kgs.)

Rear view image of G-01 MINI Cart with optional Net Basket (18" x 24") (46cm x 61cm) Double

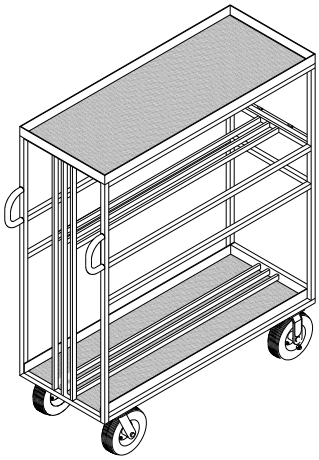

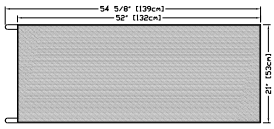

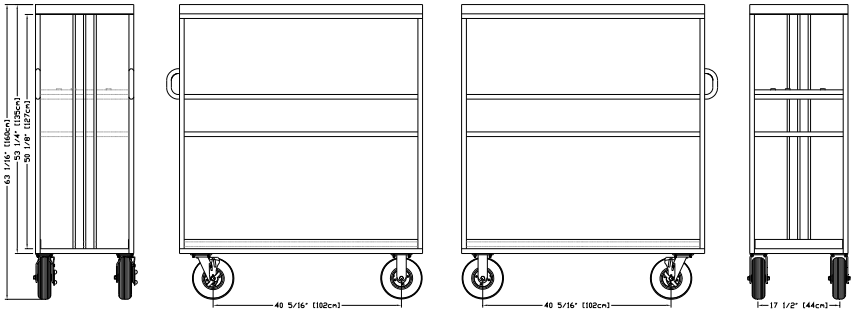

Backstage Equipment, Inc. Toll Free (800) 692-2787 • Tel (818) 504-6026 • Fax (818) 504-6180 • info@backstageweb.com • www.backstageweb.com

Combo Stand Mini Cart

Part No. GE-06 MINI

NOTE: Milk Crates not included

Sale Price: $ 1,540.00
Material: Steel
Color: Black Hammertone
Max. Capacity: 1,000 lbs. / 454 kgs.
Weight: 133 lbs. / 60.5 kgs.
Dimensions: L48" x W21 1/4" x H59 3/8"
L122cm x W54cm x H129.5cm

Features:
- Holds (6) Junior Combo Stands
- Holds (12) Low Combo Stands
- Combo Stand Holders are interchangeable with Baby Stand Holders
- Jockey Box Holds (1) Half Milk Crate
- Wheels: (2) 10" Swivel Casters & (2) 10" Rigid Casters
- Foot Brake

Accessories:
- Baby Stand Holder (MINI ES-4) $ 60.00

Options:
- Half Milk Crate **(B-05)** $ 20.00
- Half Milk Crate Liner **(B-06)** $ 12.00
- Foam Filled Tires **(WA-10 FOAM CTR)** $ 196.00

Replacement parts:
- 10" Pneumatic Tire **(WA-10 TIRE)** $ 23.00
- 10" Pneumatic Tube **(WA-10 TUBE)** $ 8.75
- 10" Pneumatic Rigid Caster Wheel **(W-10 RCX)** $ 59.50
- 10" Pneumatic Swivel Caster Wheel **(W-10 SCX)** $ 65.00

Shipping Dimensions: L49" x W22" x H56" (183 lbs.)
L125cm x W56cm x H143cm (83 kgs.)

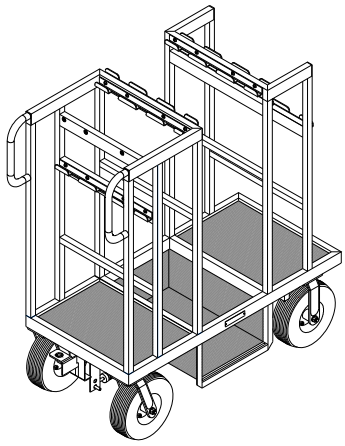

Rear view image of GE-06 MINI Cart

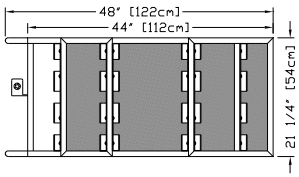

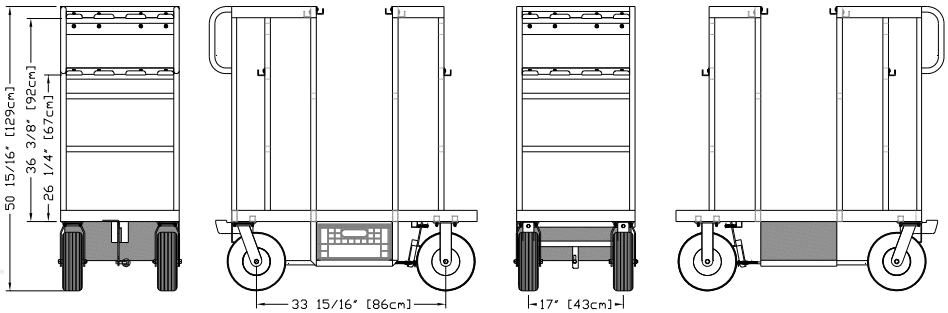

Baby Stand Mini Cart

Part No. E-16 MINI

New

Sale Price: $ 1,540.00
Material: Steel
Color: Black Hammertone
Max. Capacity: 1,000 lbs. / 454 kgs.
Weight: 129 lbs. / 58.6 kgs.
Dimensions: L48" x W21 1/4" x H50 3/4"
L122cm x W54cm x H128.9cm

Features:
- Holds (24) Baby Stands
- Baby Stand Holders are interchangeable with Combo Stand Holders
- Jockey Box Holds (1) Half Milk Crate
- Wheels: (2) 10" Swivel Casters & (2) 10" Rigid Casters
- Foot Brake

Accessories:
- Combo Stand Holder **(MINI CS-3)** $ 60.00

Options:
- Half Milk Crate **(B-05)** $ 20.00
- Half Milk Crate Liner **(B-06)** $ 12.00
- Foam Filled Tires **(WA-10 FOAM CTR)** $ 196.00

Replacement parts:
- 10" Pneumatic Tire **(WA-10 TIRE)** $ 23.00
- 10" Pneumatic Tube **(WA-10 TUBE)** $ 8.75
- 10" Pneumatic Rigid Caster Wheel **(W-10 RCX)** $ 59.50
- 10" Pneumatic Swivel Caster Wheel **(W-10 SCX)** $ 65.00

NOTE: Milk Crates not included

Shipping Dimensions: L49" x W22" x H56" (142 lbs.)
L124.5cm x W55.9cm x H142.2cm (64.6 kgs.)

Rear view image of E-16 MINI Cart

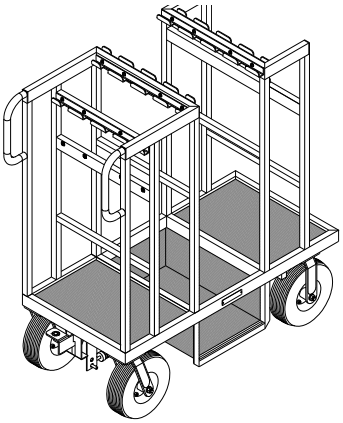

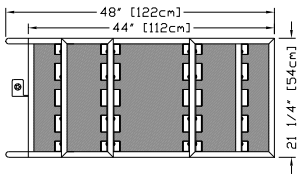

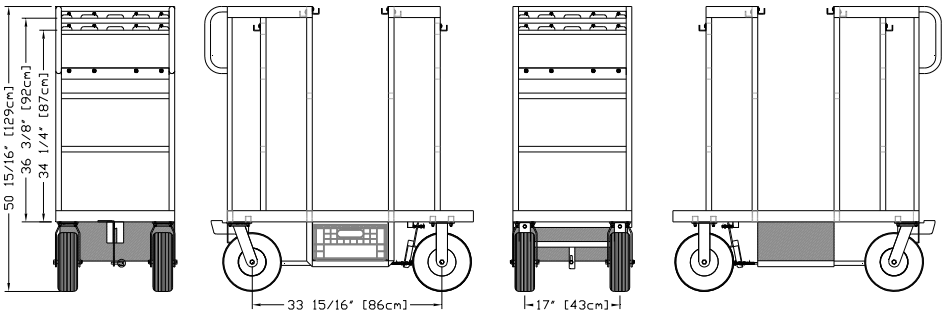

Backstage Equipment, Inc. Toll Free (800) 692-2787 • Tel (818) 504-6026 • Fax (818) 504-6180 • info@backstageweb.com • www.backstageweb.com

Super Duz-All Mini Cart

Part No. G-02 MINI

NOTE: Milk Crates not included

Sale Price: $ 2,400.00
Material: Steel
Color: Black Hammertone
Max. Capacity: 1,000 lbs. / 454 kgs.
Weight: 214 lbs. / 97.3 kgs.
Dimensions: L48" x W21 1/4" x H64 1/2"
L122cm x W54cm x H164cm

Features:
- Top Storage Section (L42" x W21" / 107cm x W53.3cm)
- Bottom Storage Section (L27 1/2" x W19" / 70cm x W48.3cm)
- (1) Adjustable Aluminum Shelf (L27 3/8" x W20 3/4" / 69.5cm x W52.7cm)
- C-Stand Bracket Holds (7) C-Stands
- Holds (8) 4 x 4 Flags
- 3 Sliding Milk Crate Compartments
- Shelves hold additional Milk Crates, Apple Boxes, Sand Bags, Rags, Cables
- Jockey Box Holds (1) Half Milk Crate
- Wheels: (2) 10" Swivel Casters & (2) 10" Rigid Casters
- Foot Brake

Accessories:
- Net Basket Double **(B-02D)** $ 405.00
- Net Basket Triple **(B-02T)** $ 425.00
- Net Basket Triple Mobile **(B-02T MOB)** $ 495.00
- Baby Stand Holder **(MINI ES-4)** $ 60.00
- Additional Aluminum Adjustable Shelf **(G-02 MINI SHELF)** $ 210.00

Options:
- Milk Crate **(B-03)** $ 20.00
- Half Milk Crate **(B-05)** $ 20.00
- Full Milk Crate Liner **(B-04)** $ 12.50
- Half Milk Crate Liner **(B-06)** $ 12.00
- Foam Filled Tires **(WA-10 FOAM CTR)** $ 196.00

Replacement parts:
- 10" Pneumatic Tire **(WA-10 TIRE)** $ 23.00
- 10" Pneumatic Tube **(WA-10 TUBE)** $ 8.75
- 10" Pneumatic Rigid Caster Wheel **(W-10 RCX)** $ 59.50
- 10" Pneumatic Swivel Caster Wheel **(W-10 SCX)** $ 65.00

Shipping Dimensions: L49" x W22" x H70" (264 lbs.)
L125cm x W56cm x H178cm (120 kgs.)

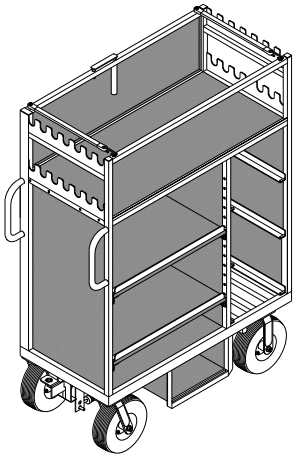

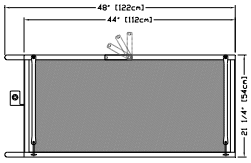

Rear view image of G-02 MINI Cart

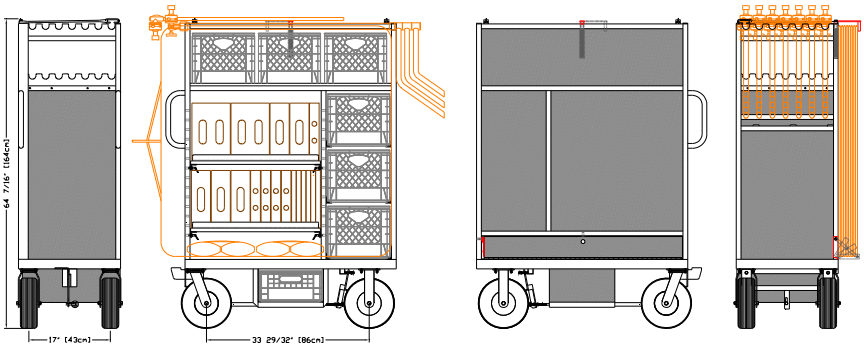

HMI Mini Cart

Part No. E-03 MINI

NOTE: Milk Crates not included

Sale Price: $ 1,810.00
Material: Steel
Color: Black Hammertone
Max. Capacity: 1,000 lbs. / 454 kgs.
Weight: 150 lbs. / 68.2 kgs.
Dimensions: L48" x W21 1/4" x H62 3/8"
L122cm x W54cm x H158.4cm

Features:
- Top Storage Pan (D19 1/4 x W34" / D48.9cm x W86.4cm)
- 2 Shelves (L33 3/4" x W21 1/4" / L85.7cm x W54cm) 1 Stationary, 1 Adjustable
- Combo Stand Holder holds (4) Combo Stands
- Jockey Box Holds (1) Half Milk Crate
- 6 HMI Head Feeder Cable Holders
- Wheels: (2) 10" Swivel Casters & (2) 10" Rigid Casters
- Foot Brake

Accessories:
- Additional Adjustable Shelf **(E-03 MINI SHELF AL)** $ 220.00

Options:
- Milk Crate **(B-03)** $ 20.00
- Half Milk Crate **(B-05)** $ 20.00
- Full Milk Crate Liner **(B-04)** $ 12.50
- Half Milk Crate Liner **(B-06)** $ 12.00
- Foam Filled Tires **(WA-10 FOAM CTR)** $ 196.00

Replacement parts:
- 10" Pneumatic Tire **(WA-10 TIRE)** $ 23.00
- 10" Pneumatic Tube **(WA-10 TUBE)** $ 8.75
- 10" Pneumatic Rigid Caster Wheel **(W-10 RCX)** $ 59.50
- 10" Pneumatic Swivel Caster Wheel **(W-10 SCX)** $ 65.00

Shipping Dimensions: L49" x W22" x H68" (200 lbs.)
L125cm x W56cm x H172.7cm (91 kgs.)

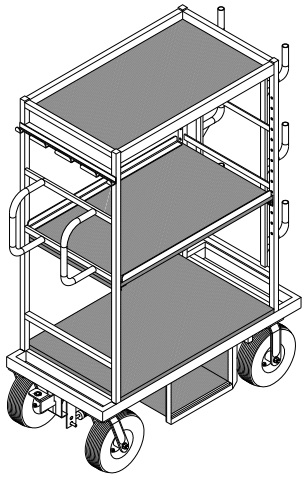

Rear view image of E-03 MINI Cart

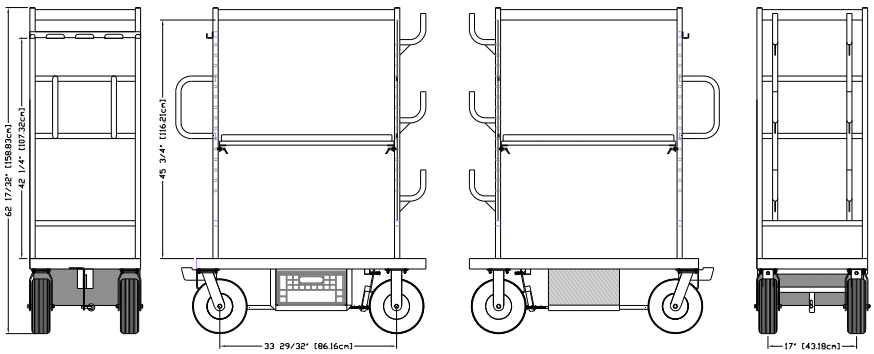

Backstage Equipment, Inc. Toll Free (800) 692-2787 • Tel (818) 504-6026 • Fax (818) 504-6180 • info@backstageweb.com • www.backstageweb.com

4-Crate Set Box Mini Cart

Part No. SB-04H MINI

Sale Price: $ 2,025.00
Material: Steel
Color: Black Hammertone
Max. Capacity: 1,000 lbs. / 454 kgs.
Weight: 199 lbs. / 90.5 kgs.
Dimensions: L48" x W21 1/4" x H39 3/4"
L122cm x W54cm x H101cm

NOTE: Milk Crates not included

Features:
- 3 Full Extension Drawers with Push to Open Drawer Slides (D17" x W27 1/4" x H3 1/4" / D43.2cm x W69.2cm x H8.3cm)
- Pull-out Work Board with Push to Open Drawer Slides
- Top Pan Holds (3) Milk Crates (D19 1/4 x W42" x H1 1/2" / D48.9cm x W106.7cm x H3.8cm)
- 4 Sliding Milk Crate Compartments
- Wheels: (2) 10" Swivel Casters & (2) 10" Rigid Casters
- Jockey Box Holds (1) Half Milk Crate
- Foot Brake

Accessories:
- Gel Holder (Single) **(GEL SB-S)** $ 232.00
- Gel Holder (Double) **(GEL SB-D)** $ 265.00

Options:
- Milk Crate **(B-03)** $ 20.00
- Half Milk Crate **(B-05)** $ 20.00
- Full Milk Crate Liner **(B-04)** $ 12.50
- Half Milk Crate Liner **(B-06)** $ 12.00
- Foam Filled Tires **(WA-10 FOAM CTR)** $ 196.00

Replacement parts:
- 10" Pneumatic Tire **(WA-10 TIRE)** $ 23.00
- 10" Pneumatic Tube **(WA-10 TUBE)** $ 8.75
- 10" Pneumatic Rigid Caster Wheel **(W-10 RCX)** $ 59.50
- 10" Pneumatic Swivel Caster Wheel **(W-10 SCX)** $ 65.00

Shipping Dimensions: L49" x W22" x H45" (249 lbs.)
L125cm x W56cm x H114.3cm (113 kgs.)

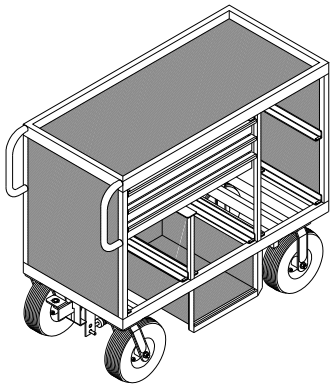

Rear view image of SB-04H MINI Cart

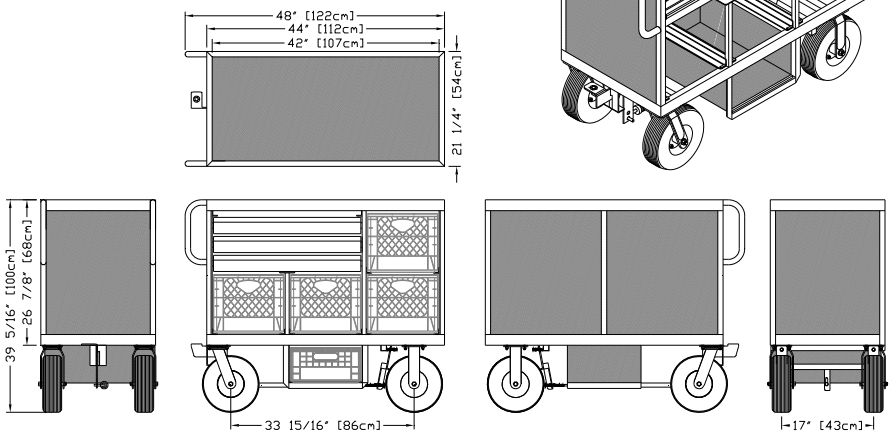

6-Crate Set Box Mini Cart

Part No. SB-06 MINI

NOTE: Milk Crates not included

Sale Price: $ 1,810.00
Material: Steel
Color: Black Hammertone
Max. Capacity: 1,000 lbs. / 454 kgs.
Weight: 157 lbs. / 71.4 kgs.
Dimensions: L48" x W21 1/4" x H39 3/4"
L122cm x W54cm x H101cm

Features:
- Top Pan Holds (3) Milk Crates
  (D19 1/4 x W42" x H1 1/2" / D48.9cm x W106.7cm x H3.8cm)
- 6 Sliding Milk Crate Compartments
- Wheels: (2) 10" Swivel Casters & (2) 10" Rigid Casters
- Jockey Box Holds (1) Half Milk Crate
- Foot Brake

Accessories:
- Gel Holder (Single) **(GEL SB-S)** $ 232.00
- Gel Holder (Double) **(GEL SB-D)** $ 265.00

Options:
- Milk Crate **(B-03)** $ 20.00
- Half Milk Crate **(B-05)** $ 20.00
- Full Milk Crate Liner **(B-04)** $ 12.50
- Half Milk Crate Liner **(B-06)** $ 12.00
- Foam Filled Tires **(WA-10 FOAM CTR)** $ 196.00

Replacement parts:
- 10" Pneumatic Tire **(WA-10 TIRE)** $ 23.00
- 10" Pneumatic Tube **(WA-10 TUBE)** $ 8.75
- 10" Pneumatic Rigid Caster Wheel **(W-10 RCX)** $ 59.50
- 10" Pneumatic Swivel Caster Wheel **(W-10 SCX)** $ 65.00

Shipping Dimensions: L49" x W22" x H45" (207 lbs.)
L125cm x W56cm x H114.3cm (94 kgs.)

Rear view image of SB-06 MINI Cart

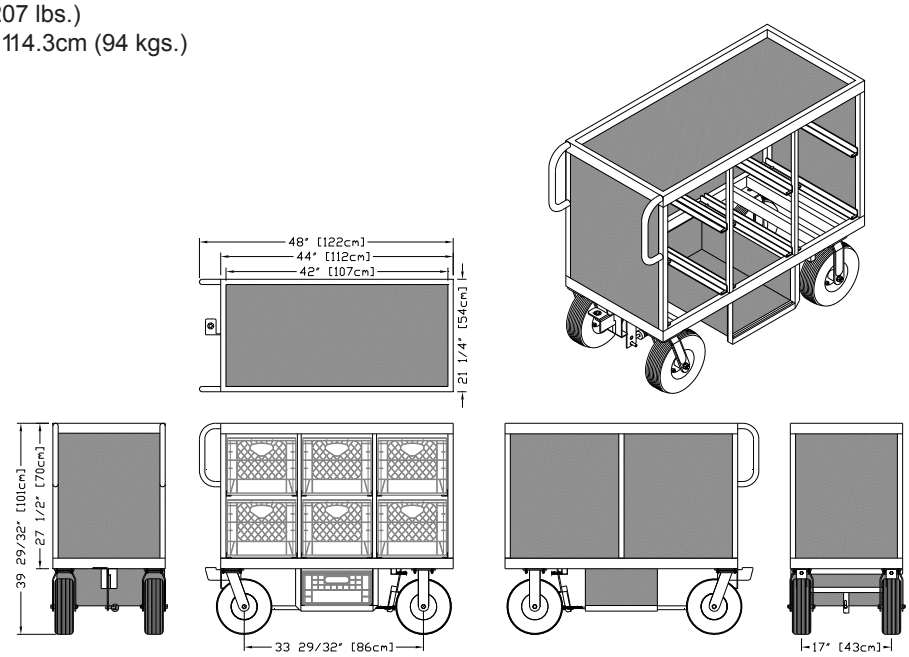

Backst age Equipment, Inc. Toll Free (800) 692-2787 • Tel (818) 504-6026 • Fax (818) 504-6180 • info@backstageweb.com • www.backstageweb.com

7-Crate Set Box Mini Cart

Part No. SB-07 MINI

Sale Price: $ 2,135.00
Material: Steel
Color: Black Hammertone
Max. Capacity: 1,000 lbs. / 454 kgs.
Weight: 227 lbs. / 103.2 kgs.
Dimensions: L48" x W21 1/4" x H51 1/2"
L122cm x W54cm x H130.8cm

NOTE: Milk Crates not included

Features:
- 3 Full Extension Drawers with Push to Open Drawer Slides (D17" x W27 1/4" x H3 1/4" / D43.2cm x W69.2cm x H8.3cm)
- Pull-out Work Board with Push to Open Drawer Slides
- Top Pan Holds (3) Milk Crates (D19 1/4 x W42" x H1 1/2" / D48.9cm x W106.7cm x H3.8cm)
- 7 Sliding Milk Crate Compartments
- Wheels: (2) 10" Swivel Casters & (2) 10" Rigid Casters
- Jockey Box Holds (1) Half Milk Crate
- Foot Brake

Accessories:
- Gel Holder (Single) **(GEL SB-S)** $ 232.00
- Gel Holder (Double) **(GEL SB-D)** $ 265.00
- Baby Stand Holder (Holds 4 Stands) **(MINI ES-4)** $ 60.00

Options:
- Milk Crate **(B-03)** $ 20.00
- Half Milk Crate **(B-05)** $ 20.00
- Full Milk Crate Liner **(B-04)** $ 12.50
- Half Milk Crate Liner **(B-06)** $ 12.00
- Foam Filled Tires **(WA-10 FOAM CTR)** $ 196.00

Replacement parts:
- 10" Pneumatic Tire **(WA-10 TIRE)** $ 23.00
- 10" Pneumatic Tube **(WA-10 TUBE)** $ 8.75
- 10" Pneumatic Rigid Caster Wheel **(W-10 RCX)** $ 59.50
- 10" Pneumatic Swivel Caster Wheel **(W-10 SCX)** $ 65.00

Shipping Dimensions: L49" x W22" x H57" (277 lbs.)
L125cm x W56cm x H144.7cm (126 kgs.)

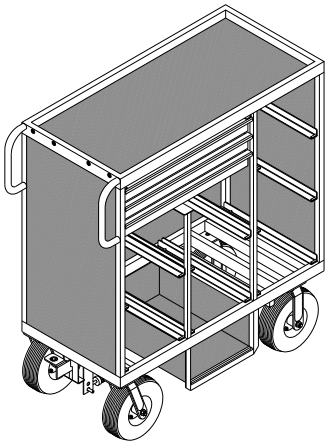

Rear view image of SB-07 MINI Cart

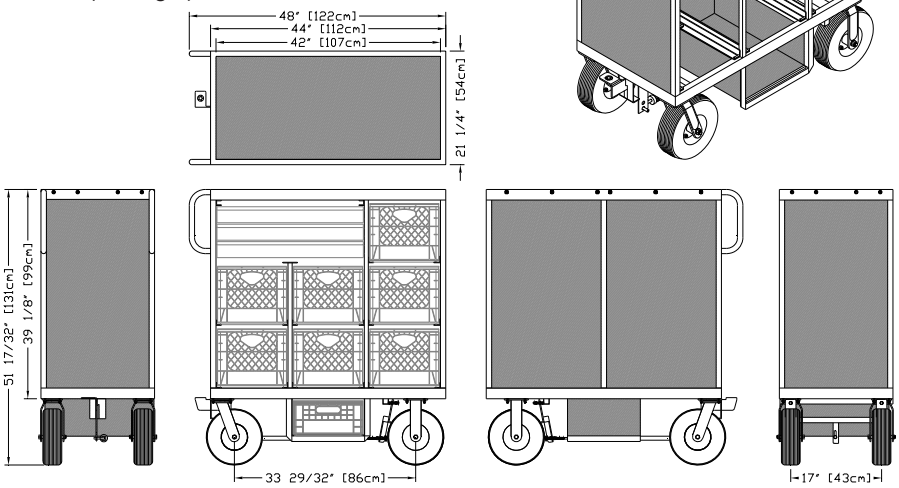

9-Crate Set Box Mini Cart

Part No. SB-09 MINI

Sale Price: $ 1,915.00
Material: Steel
Color: Black Hammertone
Max. Capacity: 1,000 lbs. / 454 kgs.
Weight: 187 lbs. / 85 kgs.
Dimensions: L48" x W21 1/4" x H51 1/2"
L122cm x W54cm x H130.8cm

NOTE: Milk Crates not included

Features:
- Top Pan Holds (3) Milk Crates
  (D19 1/4 x W42" x H1 1/2" / D48.9cm x W106.7cm x H3.8cm)
- 9 Sliding Milk Crate Compartments
- Wheels: (2) 10" Swivel Casters & (2) 10" Rigid Casters
- Jockey Box Holds (1) Half Milk Crate
- Foot Brake

Accessories:
- Gel Holder (Single) **(GEL SB-S)** $ 232.00
- Gel Holder (Double) **(GEL SB-D)** $ 265.00
- Baby Stand Holder (Holds 4 Stands) **(MINI ES-4)** $ 60.00

Options:
- Milk Crate **(B-03)** $ 20.00
- Half Milk Crate **(B-05)** $ 20.00
- Full Milk Crate Liner **(B-04)** $ 12.50
- Half Milk Crate Liner **(B-06)** $ 12.00
- Foam Filled Tires **(WA-10 FOAM CTR)** $ 196.00

Replacement parts:
- 10" Pneumatic Tire **(WA-10 TIRE)** $ 23.00
- 10" Pneumatic Tube **(WA-10 TUBE)** $ 8.75
- 10" Pneumatic Rigid Caster Wheel **(W-10 RCX)** $ 59.50
- 10" Pneumatic Swivel Caster Wheel **(W-10 SCX)** $ 65.00

Shipping Dimensions: L49" x W22" x H57" (237 lbs.)
L125cm x W56cm x H144.7cm (107.7 kgs.)

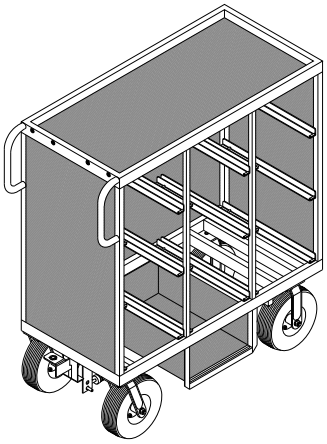

Rear view image of SB-09 MINI Cart

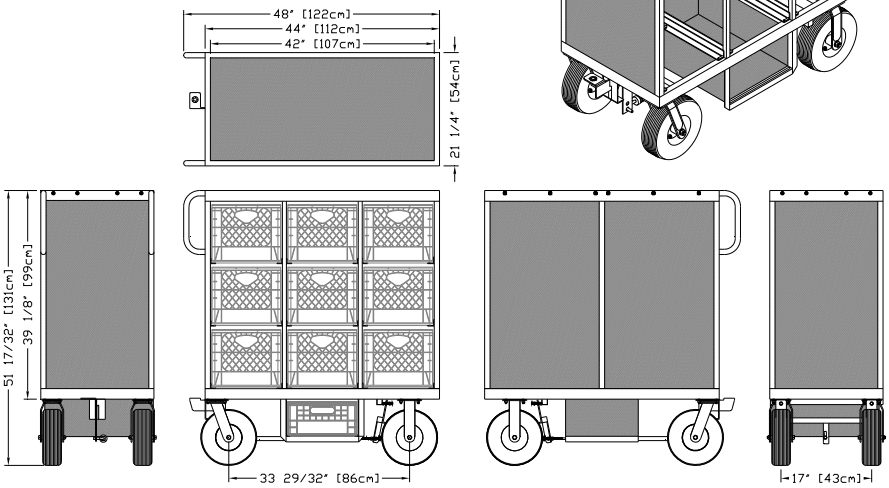

Backstage Equipment, Inc. Toll Free (800) 692-2787 • Tel (818) 504-6026 • Fax (818) 504-6180 • info@backstageweb.com • www.backstageweb.com

Prop Crate Mini Cart

Part No. P-03 MINI

Sale Price: $ 2,650.00
Material: Steel
Color: Black Hammertone
Max. Capacity: 1,000 lbs. / 454 kgs.
Weight: 245 lbs. / 111.4 kgs.
Dimensions: L48" x W21 1/4" x H52 5/8"
L122cm x W54cm x H133.7cm

Features:
- 2 Birch Drawers with Push to Open Drawer Slides (Small) (D19 1/2" x W27" x H5 1/4" / D49.5cm x W68.6cm x H13.3cm)
- 2 Birch Drawers with Push to Open Drawer Slides (Large) (D19 1/2" x W27" x H10 3/4" / D49.5cm x W68.6cm x H27.3cm)
- Pull-out Work Board with Push to Open Drawer Slides (D19 1/2" x W27" / D49.5cm x W69.2cm)
- (3) Sliding Milk Crate Compartments
- Pull-out Telescopic Chair Holder (holds up to (3) Wooden Directors Chairs)
- Top Storage Pan Holds (3) Milk Crates (D19 1/4" x W42" x H1 1/2" / D48.9cm x W106.7cm x H3.8cm)
- Jockey Box Holds (1) Half Milk Crate
- Wheels: (2) 10" Swivel Casters & (2) 10" Rigid Casters
- Foot Brake

NOTE: Milk Crates not included

Accessories:

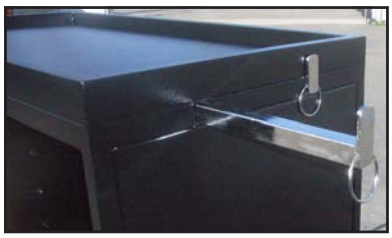

Close-up of Telecopic Chair Holders

Options:
- Milk Crate **(B-03)** $ 20.00
- Half Milk Crate **(B-05)** $ 20.00
- Full Milk Crate Liner **(B-04)** $ 12.50
- Half Milk Crate Liner **(B-06)** $ 12.00
- Foam Filled Tires **(WA-10 FOAM CTR)** $ 196.00

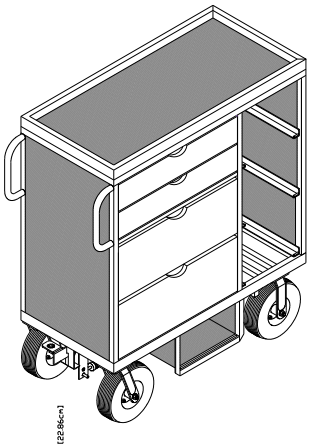

Replacement parts:
- 10" Pneumatic Tire **(WA-10 TIRE)** $ 23.00
- 10" Pneumatic Tube **(WA-10 TUBE)** $ 8.75
- 10" Pneumatic Rigid Caster Wheel **(W-10 RCX)** $ 59.50
- 10" Pneumatic Swivel Caster Wheel **(W-10 SCX)** $ 65.00

Shipping Dimensions: L49" x W22" x H57" (237 lbs.)
L125cm x W56cm x H144.7cm (107.7 kgs.)

Rear view image of P-03 MINI Cart

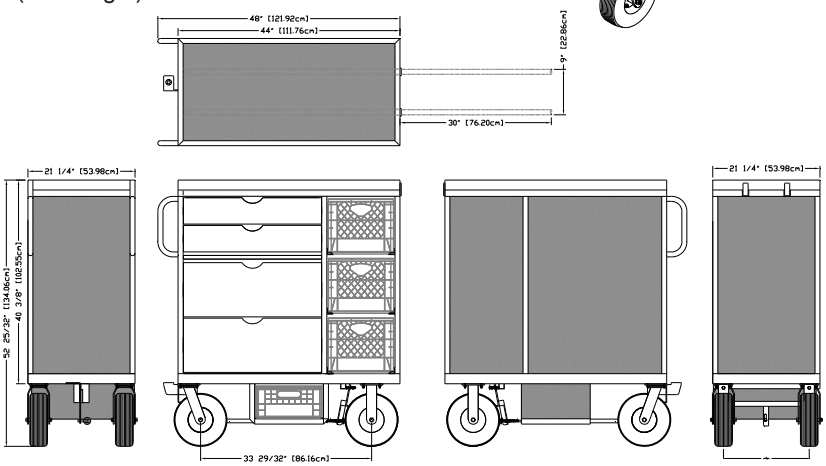

Electrician's Cart

Part No. E-01

Sale Price: $ 1,915.00
Material: Steel
Color: Black Hammertone
Max. Capacity: 1,000 lbs. / 454 kgs.
Weight: 230 lbs. / 98 kgs.
Dimensions: L61 1/8" x W28 1/2" x H63"
L155.3cm x W72.4cm x H160cm

NOTE: Milk Crates not included

Features:
- (6) Sliding Milk Crate Compartments
- Top Tray (D18" x W28 1/4" x H13") (D45.7cm x W71.8cm x H33cm)
- End Pans (D13" x W18") (D33cm x W45.7cm)
- Rear Storage (L55" x W7") (L139.7cm x W17.8cm)
- Jockey Box Holds (2) Half Milk Crates
- Wheels (2) 10" Swivel Casters & (2) 10" Rigid Casters
  (Optional (2) 10" Swivel Casters & (4) 10" Rigid Casters)
- Foot Brake
- Pull Bar
- Locking Bar

Accessories:

Options:
- Rear Fold-Down Table **(TB-42)** $ 265.00
- Milk Crate **(B-03)** $ 20.00
- Half Milk Crate **(B-05)** $ 20.00
- Full Milk Crate Liner **(B-04)** $ 12.50
- Half Milk Crate Liner **(B-06)** $ 12.00
- Foam Filled Tires **(WA-10 FOAM CTR)** $ 196.00
- Additional (2) 10" Pneumatic Rigid Caster Wheel **(W-10 RCX)** $ 119.00
- Additional (2) 10" Foam Filled Tires **(WA-10 FOAM CTR)** $ 98.00

Replacement parts:
- 10" Pneumatic Tire **(WA-10 TIRE)** $ 23.00
- 10" Pneumatic Tube **(WA-10 TUBE)** $ 8.75
- 10" Pneumatic Rigid Caster Wheel **(W-10 RCX)** $ 59.50
- 10" Pneumatic Swivel Caster Wheel **(W-10 SCX)** $ 65.00

Shipping Dimensions: L62" x W29" x H64" (255 lbs.)
L157.5cm x W73.7cm x H162.6cm (115.9 kgs.)

Backstage Equipment, Inc. Toll Free (800) 692-2787 • Tel (818) 504-6026 • Fax (818) 504-6180 • info@backstageweb.com • www.backstageweb.com

Kino-Flo Cart

Part No. E-09

Sale Price: $ 1,810.00
Material: Steel
Color: Black Hammertone
Max. Capacity: 1,000 lbs. / 454 kgs.
Weight: 223 lbs. / 101.4 kgs.
Dimensions: L61 1/8" x W28 1/2" x H63"
L155.3cm x W72.4cm x H160cm

NOTE: Milk Crates not included

Features:
- Holds (10) 4-Bank Units, (12) Double Bank Units (2) Single Bank Units, (5) 24" 4-Bank Units
- (6) Sliding Milk Crate Compartments
- Top Tray (D18" x W28 1/4" x H13") (D45.7cm x W71.8cm x H33cm)
- End Pans (D13" x W18") (D33cm x W45.7cm)
- Rear Storage (L55" x W7") (L139.7cm x W17.8cm)
- Front Storage (L26" x W18") (L66cm x W45.7cm
- Jockey Box Holds (2) Half Milk Crates
- Wheels (2) 10" Swivel Casters & (2) 10" Rigid Casters (Optional (2) 10" Swivel Casters & (4) 10" Rigid Casters)
- Foot Brake
- Pull Bar
- Locking Bar

Accessories:

Options:
- Rear Fold-Down Table **(TB-42)** $ 265.00
- Milk Crate **(B-03)** $ 20.00
- Half Milk Crate **(B-05)** $ 20.00
- Full Milk Crate Liner **(B-04)** $ 12.50
- Half Milk Crate Liner **(B-06)** $ 12.00
- Foam Filled Tires **(WA-10 FOAM CTR)** $ 196.00
- Additional (2) 10" Pneumatic Rigid Caster Wheel **(W-10 RCX)** $ 119.00
- Additional (2) 10" Foam Filled Tires **(WA-10 FOAM CTR)** $ 98.00

Replacement parts:
- 10" Pneumatic Tire **(WA-10 TIRE)** $ 23.00
- 10" Pneumatic Tube **(WA-10 TUBE)** $ 8.75
- 10" Pneumatic Rigid Caster Wheel **(W-10 RCX)** $ 59.50
- 10" Pneumatic Swivel Caster Wheel **(W-10 SCX)** $ 65.00

Shipping Dimensions: L62" x W29" x H64" (255 lbs.)
L157.5cm x W73.7cm x H162.6cm (115.9 kgs.)

SkyPanel 120 Cart

Part No. E-17

Sale Price: $ 3,150.00
Material: Steel
Color: Black Texture
Max. Capacity: 1000 lbs. /454.6 kgs.
Weight: 476 lbs. / 216.4 kgs.
Dimensions: L60" x W28" x H75"
L152.4cm x W71.1cm x H190.5cm

Features:
- All Steel Construction
- Accommodates up to eight (8) SkyPanel 120 or 60 or 30 Fixtures
- Accommodates up to eight (8) SkyPanel 60 and eight (8) SkyPanel 30 Fixtures with optional SkyPanel S tackable Shelves
- Accommodates up to sixteen (16) SkyPanel 30 with optional SkyPanel S tackable Shelves
- Accommodates up to eight (8) Power Supplies and Cables
- “D” Style Push / Pull Handles
- Wheels: (2) 10” Swivel Casters & (2) 10” Rigid Casters
- Jockey Box Holds (2) Half Milk Crates
- Locking Bars (4) keep SkyPanels secured in cart
- Foot Brake

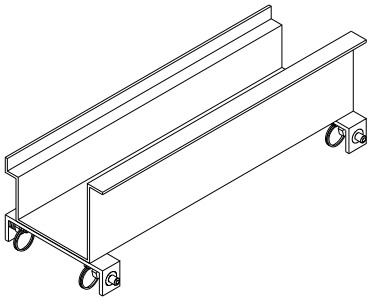

SkyPanel Stackable Shelf **(E-17 B)** $ 155.00

Accessories:
- SkyPanel Stackable Shelf **(E-17 B)** $ 155.00

Options:
- Half Milk Crate **(B-05)** $ 20.00
- Half Milk Crate Liner **(B-06)** $ 12.00
- Foam Filled Tires (4) **(WA-10 FOAM CTR)** $ 196.00

Replacement parts:
- 10” Pneumatic Tire **(WA-10 TIRE)** $ 23.00
- 10” Pneumatic Tube **(WA-10 TUBE)** $ 8.75
- 10” Pneumatic Rigid Caster Wheel **(W-10 RCX)** $ 59.50
- 10” Pneumatic Swivel Caster Wheel **(W-10 SCX)** $ 65.00
- Locking Bar **(E-17 C)** $ 72.00

Shipping Dimensions: L57” x W29” x H80” (494 lbs.) Includes Pallet
L144.8cm x W73.7cm x H203.2cm (224.6 kgs.)

SkyPanel 120 Cart (Cont.)

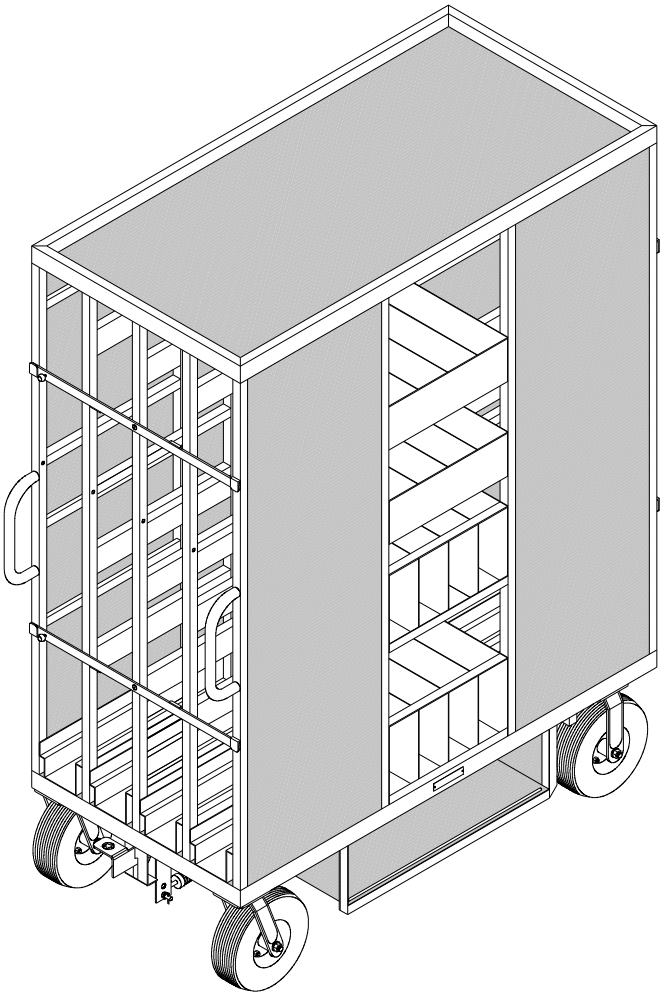

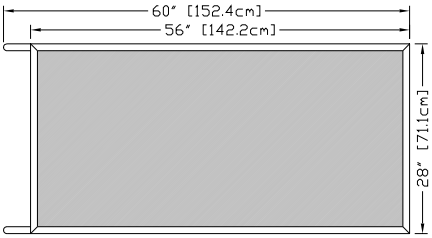

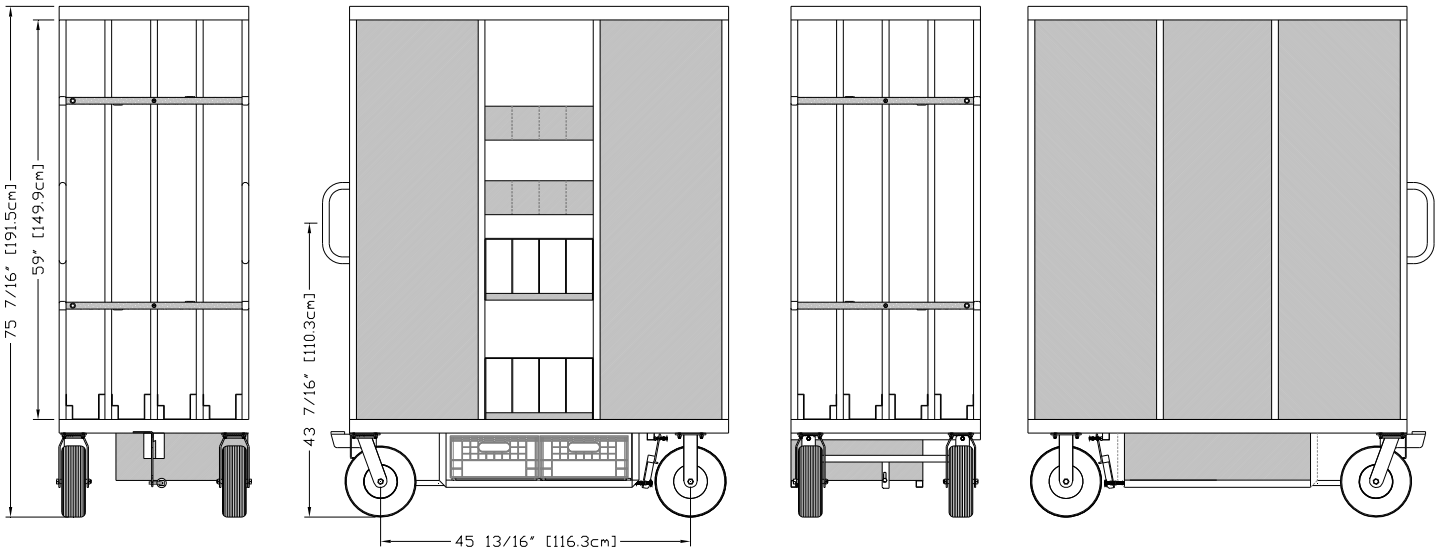

SkyPanel 360 Cart (Dual)

Part No. E-19

New

Sale Price: $ 3,250.00
Material: Steel
Color: Black Texture
Max. Capacity: 1000 lbs. /454.6 kgs.
Weight: 435 lbs. / 197.7 kgs.
Dimensions: L68" x W30" x H66"
L172.7cm x W76.2cm x H167.6cm

NOTE: Milk Crates not included

Features:
- All Steel Construction
- Accomodates (2) SkyPanel 360
- Accomodates (2) Power Supply Unit s and Cables
- Accomodates up to (1 1) SkyPanel 360 Dif fusion or/and Intensifiers
- Accomodates (2) Short Yokes
- "D" Style Push / Pull Handles
- Wheels: (2) 10" Swivel Casters & (2) 10" Rigid Casters
- Jockey Box Holds (2) Half Milk Crates
- Locking Bars (3) keeps SkyPanels and Diffusion secured in cart
- Foot Brake

Accessories:

Options:
- Half Milk Crate **(B-05)** $ 20.00
- Half Milk Crate Liner **(B-06)** $ 12.00
- Foam Filled Tires (4) **(WA-10 FOAM CTR)** $ 196.00

Replacement parts:
- 10" Pneumatic Tire **(WA-10 TIRE)** $ 23.00
- 10" Pneumatic Tube **(WA-10 TUBE)** $ 8.75
- 10" Pneumatic Rigid Caster Wheel **(W-10 RCX)** $ 59.50
- 10" Pneumatic Swivel Caster Wheel **(W-10 SCX)** $ 65.00
- Locking Bar **(E-19 G)** $ 39.00

Shipping Dimensions: L69" x W31" x H72" (480 lbs.) Includes Pallet
L175.3cm x W78.8cm x H182.9cm (218.2 kgs.)

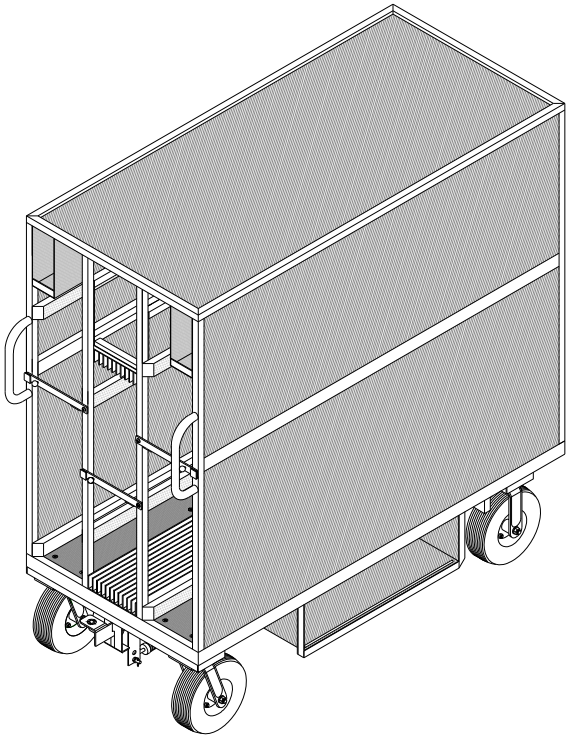

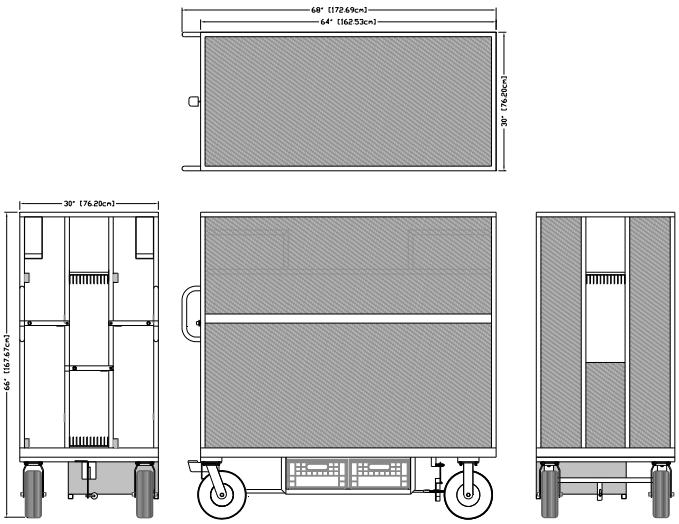

Backst age Equipment, Inc. Toll Free (800) 692-2787 • Tel (818) 504-6026 • Fax (818) 504-6180 • info@backstageweb.com • www.backstageweb.com

SkyPanel 360 Cart (Single)

Part No. E-20

New

Sale Price: $ 2,950.00
Material: Steel
Color: Black Texture
Max. Capacity: 1000 lbs. /454.6 kgs.
Weight: 375 lbs. / 170.5 kgs.
Dimensions: L68" x W21 1/4" x H66"
L172.7cm x W54cm x H167.6cm

NOTE: Milk Crates not included

Features:
- All Steel Construction
- Accomodates (1) SkyPanel 360
- Accomodates (1) Power Supply Unit and Cables
- Accomodates up to (1 1) SkyPanel 360 Dif fusion or/and Intensifiers
- Accomodates (1) Short Yoke
- "D" Style Push / Pull Handles
- Wheels: (2) 10" Swivel Casters & (2) 10" Rigid Casters
- Jockey Box Holds (2) Half Milk Crates
- Locking Bars (2) keeps SkyPanel and Diffusion secured in cart
- Foot Brake

Accessories:

Options:
- Half Milk Crate **(B-05)** $ 20.00
- Half Milk Crate Liner **(B-06)** $ 12.00
- Foam Filled Tires (4) **(WA-10 FOAM CTR)** $ 196.00

Replacement parts:
- 10" Pneumatic Tire **(WA-10 TIRE)** $ 23.00
- 10" Pneumatic Tube **(WA-10 TUBE)** $ 8.75
- 10" Pneumatic Rigid Caster Wheel **(W-10 RCX)** $ 59.50
- 10" Pneumatic Swivel Caster Wheel **(W-10 SCX)** $ 65.00
- Locking Bar **(E-19 G)** $ 39.00

Shipping Dimensions: L69" x W22" x H72" (422 lbs.) Includes Pallet
L175.3cm x W55.9cm x H182.9cm (218.2 kgs.)

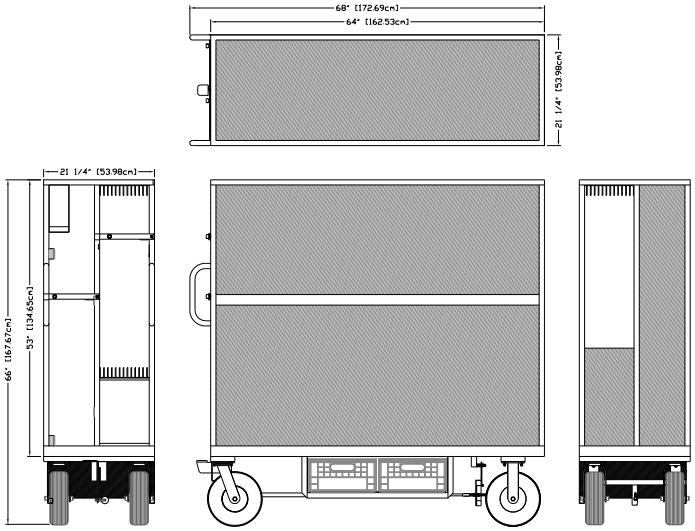

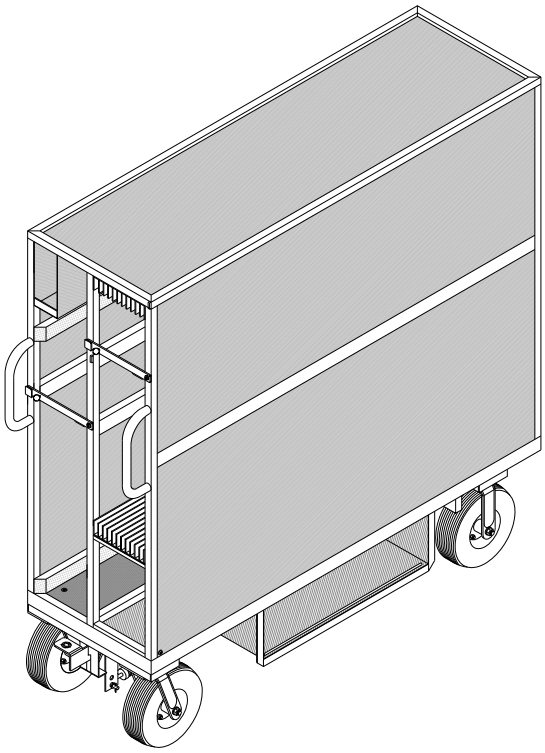

Combo Stand Cart

Part No. GE-06

Sale Price: $ 1,645.00
Material: Steel
Color: Black Hammertone
Max. Capacity: 1,000 lbs. / 454 kgs.
Weight: 135 lbs. / 61.4 kgs.
Dimensions: L45 1/4" x W28" x H51 7/8"
L114.9cm x W71.1cm x H131.8cm

Features:
- Holds (16) Junior Combo Stands & (10) Low Combo Stands
- Combo Stand Holders can be switched with Baby Stand Holders (see accessories)
- Jockey Box Holds (1) Half Milk Crate (When not using 3-Riser Combo Stands)
- Wheels (2) 10” Swivel Casters & (2) 10” Rigid Casters
  (Optional (2) 10” Swivel Casters & (4) 10” Rigid Casters)
- Foot Brake

Accessories:
- Baby Stand Holder **(ES-5)** Holds (5) Baby Stands $ 65.00
- Baby Stand Holder **(ES-6)** Holds (6) Baby Stands $ 65.00

Options:
- Half Milk Crate **(B-05)** $ 20.00
- Half Milk Crate Liner **(B-06)** $ 12.00
- Foam Filled Tires **(WA-10 FOAM CTR)** $ 196.00
- Additional (2) 10” Pneumatic Rigid Caster Wheel **(W-10 RCX)** $ 119.00
- Additional (2) 10” Foam Filled Tires **(WA-10 FOAM CTR)** $ 98.00

NOTE: Milk Crates not included

Replacement parts:
- 10” Pneumatic Tire **(WA-10 TIRE)** $ 23.00
- 10” Pneumatic Tube **(WA-10 TUBE)** $ 8.75
- 10” Pneumatic Rigid Caster Wheel **(W-10 RCX)** $ 59.50
- 10” Pneumatic Swivel Caster Wheel **(W-10 SCX)** $ 65.00

Shipping Dimensions: L46” x W29” x H53” (150 lbs.)
L116.8cm x W73.7cm x H134.6cm (68.2 kgs.)

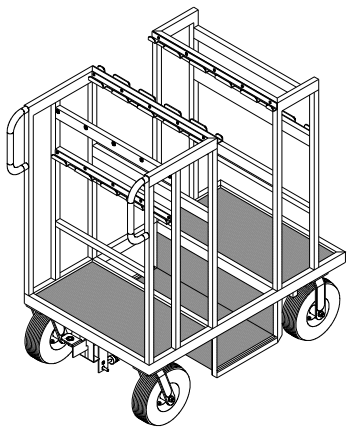

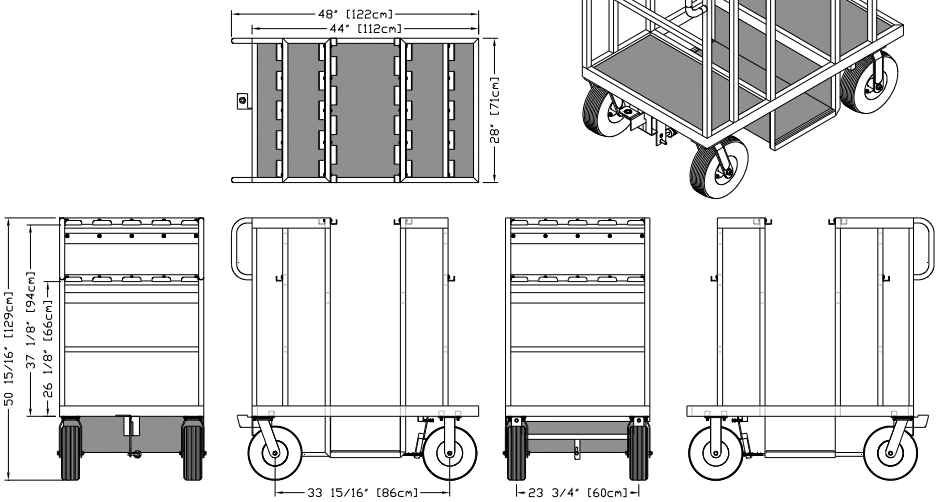

Backstage Equipment, Inc. Toll Free (800) 692-2787 • Tel (818) 504-6026 • Fax (818) 504-6180 • info@backstageweb.com • www.backstageweb.com

Baby Stand Cart

Part No. E-16

Sale Price: $ 1,645.00
Material: Steel
Color: Black Hammertone
Max. Capacity: 1,000 lbs. / 454 kgs.
Weight: 135 lbs. / 61.4 kgs.
Dimensions: L45 1/4" x W28" x H51 7/8"
L114.9cm x W71.1cm x H131.8cm

Features:
- Holds (32) Baby S tands (2-Riser and 3-Riser)
- Baby S tand Holders can be switched with Combo S tand Holders (see accessories)
- Jockey Box Holds (1) Half Milk Crate
- Wheels (2) 10” Swivel Casters & (2) 10” Rigid Casters
  (Optional (2) 10” Swivel Casters & (4) 10” Rigid Casters)
- Foot Brake

Accessories:
- Combo Stand Holder **(CS-4)** Holds (4) Combo S tands $ 65.00
- Combo Stand Holder **(CS-5)** Holds (5) Combo S tands $ 65.00

Options:
- Half Milk Crate **(B-05)** $ 20.00
- Half Milk Crate Liner **(B-06)** $ 12.00
- Foam Filled Tires **(WA-10 FOAM CTR)** $ 196.00
- Additional (2) 10” Pneumatic Rigid Caster Wheel **(W-10 RCX)** $ 119.00
- Additional (2) 10” Foam Filled Tires **(WA-10 FOAM CTR)** $ 98.00

NOTE: Milk Crates not included

Replacement parts:
- 10” Pneumatic Tire **(WA-10 TIRE)** $ 23.00
- 10” Pneumatic Tube **(WA-10 TUBE)** $ 8.75
- 10” Pneumatic Rigid Caster Wheel **(W-10 RCX)** $ 59.50
- 10” Pneumatic Swivel Caster Wheel **(W-10 SCX)** $ 65.00

Shipping Dimensions: L46” x W29” x H53” (150 lbs.)
L116.8cm x W73.7cm x H134.6cm (68.2 kgs.)

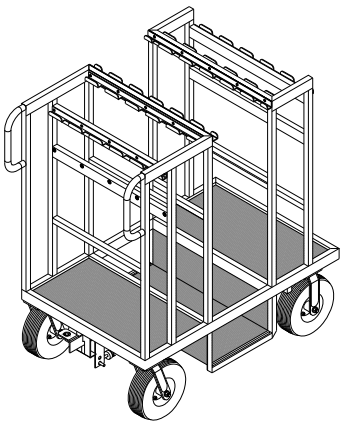

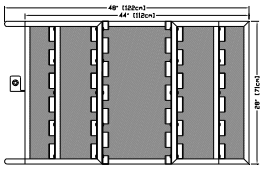

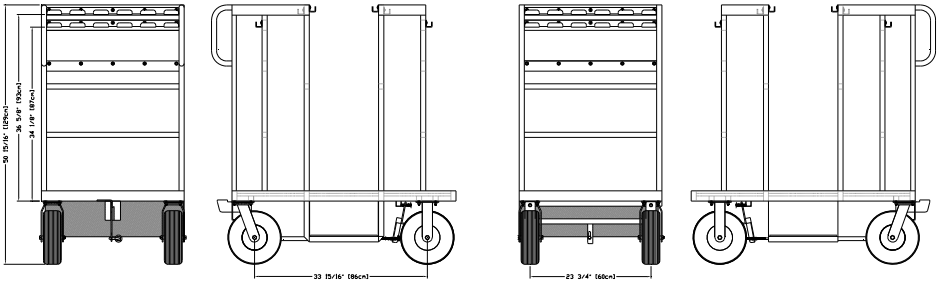

Apple Box Cart

Part No. G-10

Sale Price: $ 965.00
Material: Steel
Color: Black Hammertone
Max. Capacity: 800 lbs. / 364 kgs.
Weight: 108 lbs. / 49.1 kgs.
Dimensions: L35 1/2" x W26 1/2" x H79 1/2"
L90.2cm x W67.3cm x H202cm

Features:
• Holds (16) Full, (18) Half or combination
• Wheels (2) 8” Swivel Casters with Brakes & (2) 8” Rigid Casters

Accessories:

Options:
• Foam Filled Tires **(WA-08 FOAM CTR)** $ 172.00

Replacement parts:
• 8” Pneumatic Tire **(WA-08 TIRE)** $ 18.00
• 8” Pneumatic Tube **(WA-08 TUBE)** $ 8.00
• 8” Pneumatic Rigid Caster Wheel **(W-08 RCX)** $ 48.00
• 8” Pneumatic Swivel Caster Wheel with Brake **(W-08 SCBRX)** $ 53.50

Shipping Dimensions: L40” x W27” x H80” (123 lbs.)
L101.6cm x W68.6cm x H203.2cm (55.9 kgs.)

Backstage Equipment, Inc. Toll Free (800) 692-2787 • Tel (818) 504-6026 • Fax (818) 504-6180 • info@backstageweb.com • www.backstageweb.com

Apple Box Cart Plus

Part No. G-28

New

Sale Price: $ 1,700.00
Material: Steel
Color: Black Hammertone
Max. Capacity: 900 lbs. / 409 kgs.
Weight: 100 lbs. / 45.5 kgs.
Dimensions: L42 1/4" x W26" x H66 3/4"
L107.3cm x W66cm x H169.6cm

Features:
- Holds (18) Full or (36) Half or (75) Quarter or (156) Pancakes or combination
- Holds (2) Milk Crates (Carry Cup Blocks and Wedges)
- (2) Security Belt Straps Hold Apple Boxes in place
- Wheels (2) 8" Swivel Casters & (2) 10" Pneumatic Offset Whels
- Hand Brake
- Pull Bar (Telescopic)

Accessories:

Options:
- Milk Crate **(B-03)** $ 20.00
- Full Milk Crate Liner **(B-04)** $ 12.50
- Foam Filled Tires **(WA-10 FOAM OS and WA-08 FOAM CTR)** $ 184.00

Replacement parts:
- 8" Pneumatic Tire **(WA-08 TIRE)** $ 18.00
- 8" Pneumatic Tube **(WA-08 TUBE)** $ 8.00
- 8" Pneumatic Swivel Caster Wheel **(W-08 SCX)** $ 51.00
- 10" Pneumatic Tire **(WA-10 TIRE)** $ 23.00
- 10" Pneumatic Tube **(WA-10 TUBE)** $ 8.75
- 10" Pneumatic Offset Wheel **(W-10 OS34X)** $ 47.50

Shipping Dimensions: L36" x W27" x H67" (112 lbs.)
L91.4cm x W68.6cm x H170.2cm (50.9 kgs.)

Head Cart

Part No. E-02

Sale Price: $ 1,915.00
Material: Steel
Color: Black Hammertone
Max. Capacity: 1,000 lbs. / 454 kgs.
Weight: 216 lbs. / 98.2 kgs.
Dimensions: L59 1/8" x W28" x H60 1/8"
L150.2cm x W71.1cm x H152.7cm

Features:
- (2) Adjustable (Alum.) Shelves with Spring Loaded Locking Pins (L53 7/8" x W19 1/2") (L136.8cm x W49.5cm)
- Bottom Section (L54" x W19 1/2") (L137.2cm x W49.5cm)
- Outfitted with (4) Built-In Front, Rear and Side Sand Holder Threaded Rivets, accommodates up to (20) Electric Stands
- Rear Storage (L54" x W7") (L137.2cm x W17.8cm)
- Jockey Box Holds (2) Half Milk Crates
- Wheels (2) 10" Swivel Casters & (2) 10" Rigid Casters (Optional (2) 10" Swivel Casters & (4) 10" Rigid Casters)
- Foot Brake
- Pull Bar

Accessories:
- Additional (Aluminum) Adjustable Shelf **(E-02 SHELF (AL))** $ 351.00

Options:
- Rear Fold-Down Table **(TB-42)** $ 265.00
- Milk Crate **(B-03)** $ 20.00
- Half Milk Crate **(B-05)** $ 20.00
- Full Milk Crate Liner **(B-04)** $ 12.50
- Half Milk Crate Liner **(B-06)** $ 12.00
- Foam Filled Tires **(WA-10 FOAM CTR)** $ 196.00
- Additional (2) 10" Pneumatic Rigid Caster Wheel **(W-10 RCX)** $ 119.00
- Additional (2) 10" Foam Filled Tires **(WA-10 FOAM CTR)** $ 98.00

Replacement parts:
- 10" Pneumatic Tire **(WA-10 TIRE)** $ 23.00
- 10" Pneumatic Tube **(WA-10 TUBE)** $ 8.75
- 10" Pneumatic Rigid Caster Wheel **(W-10 RCX)** $ 59.50
- 10" Pneumatic Swivel Caster Wheel **(W-10 SCX)** $ 65.00

Shipping Dimensions: L60" x W29" x H61" (230 lbs.)
L155cm x W73.7cm x H152.4cm (104.6 kgs.)

NOTE: Milk Crates not included

Backstage Equipment, Inc. Toll Free (800) 692-2787 • Tel (818) 504-6026 • Fax (818) 504-6180 • info@backstageweb.com • www.backstageweb.com

Head Cart Plus

Part No. E-02 PLUS

New

Sale Price: $ 2,080.00
Material: Steel
Color: Black Hammertone
Max. Capacity: 1,000 lbs. / 454 kgs.
Weight: 248 lbs. / 112.7 kgs.
Dimensions: L65 1/4" x W28" x H60 1/4"
L165.7cm x W71.1cm x H153cm

Features:
- (2) Adjustable (Alum.) Shelves with Spring Loaded Locking Pins (L53 7/8" x W19 1/2") (L136.8cm x W49.5cm)
- Bottom Section (L54" x W19 1/2") (L137.2cm x W49.5cm)
- Rear Section Holds (5) Combo Stands and (4) Low Combo Stands
- Side Section Holds (4) Low Combo Stands or (4) Baby Stands
- (3) Large Handles Hold Stingers
- Jockey Box Holds (2) Half Milk Crates
- Wheels (2) 10" Swivel Casters & (2) 10" Rigid Casters (Optional (2) 10" Swivel Casters & (4) 10" Rigid Casters)
- Foot Brake
- Pull Bar

Accessories:
- Additional Adjustable (Alum.) Shelf with Spring Loaded Locking Pins **(E-02 SHELF (AL))** $ 351.00

NOTE: Milk Crates not included

Options:
- Rear Fold-Down Table **(TB-42)** $ 265.00
- Milk Crate **(B-03)** $ 20.00
- Half Milk Crate **(B-05)** $ 20.00
- Full Milk Crate Liner **(B-04)** $ 12.50
- Half Milk Crate Liner **(B-06)** $ 12.00
- Foam Filled Tires **(WA-10 FOAM CTR)** $ 196.00
- Additional (2) 10" Pneumatic Rigid Caster Wheel **(W-10 RCX)** $ 119.00
- Additional (2) 10" Foam Filled Tires **(WA-10 FOAM CTR)** $ 98.00

Replacement parts:
- 10" Pneumatic Tire **(WA-10 TIRE)** $ 23.00
- 10" Pneumatic Tube **(WA-10 TUBE)** $ 8.75
- 10" Pneumatic Rigid Caster Wheel **(W-10 RCX)** $ 59.50
- 10" Pneumatic Swivel Caster Wheel **(W-10 SCX)** $ 65.00

Shipping Dimensions: L66" x W29" x H61" (263 lbs.)
L167.6cm x W73.7cm x H154.9cm (119.6 kgs.)

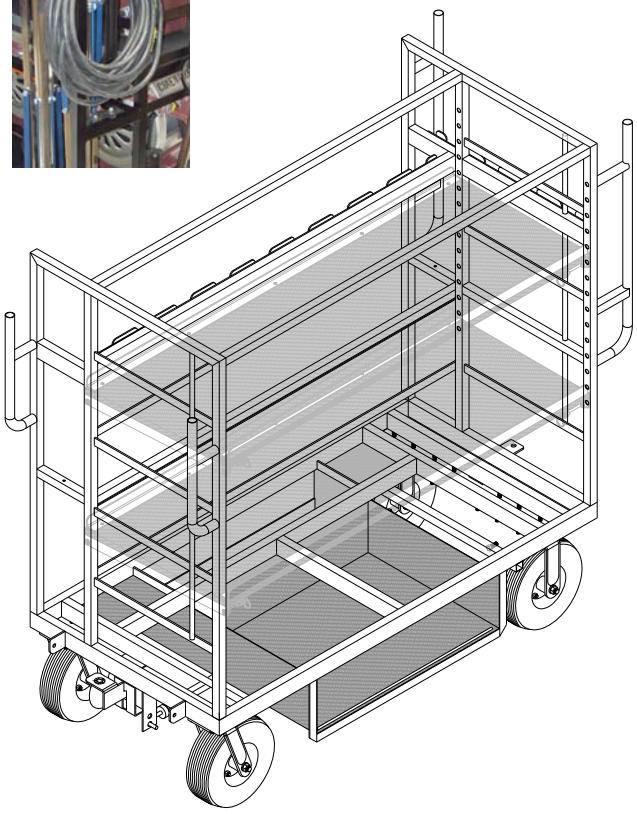

HMI Cart

Part No. E-03

Sale Price: $ 1,915.00
Material: Steel
Color: Black Hammertone
Max. Capacity: 1,000 lbs. / 454 kgs.
Weight: 230 lbs. / 104.6 kgs.
Dimensions: L60" x W28" x H75"
L152.4cm x W71.1cm x H190.5cm

NOTE: Milk Crates not included

Features:
- Holds (5) Combo Stands
- (6) 16" Head Feeder Prongs
- (1) Adjustable Shelf (L40" x W27 1/2") (L101.6cm x W70cm)
- Bottom Section (L40" x W27 1/2") (L101.6cm x W70cm)
- Top Storage Pan (L40" x W26" x H5 1/2") (L101.6cm x W66cm X H14cm)
- Jockey Box Holds (2) Half Milk Crates
- Wheels (2) 10" Swivel Casters & (2) 10" Rigid Casters
  (Optional (2) 10" Swivel Casters & (4) 10" Rigid Casters)
- Foot Brake
- Pull Bar
- Foam Filled Tires

Accessories:
- Additional Adjustable Shelf **(E-03 SHELF)** $ 243.00

Options:
- Milk Crate **(B-03)** $ 20.00
- Half Milk Crate **(B-05)** $ 20.00
- Full Milk Crate Liner **(B-04)** $ 12.50
- Half Milk Crate Liner **(B-06)** $ 12.00
- Additional (2) 10" Pneumatic Rigid Caster Wheel **(W-10 RCX)** $ 119.00
- Additional (2) 10" Foam Filled Tires **(WA-10 FOAM CTR)** $ 98.00

Replacement parts:
- 10" Foam Filled Rigid Caster Wheel **(W-10 RCX / WA-10 FOAM CTR)** $ 108.50
- 10" Foam Filled Swivel Caster Wheel **(W-10 SCX / WA-10 FOAM CTR)** $ 114.00

Shipping Dimensions: L61" x W29" x H76" (245 lbs.)
L155cm x W73.7cm x H193cm (111.4 kgs.)

Universal Junior Cart

Part No. E-05

NOTE: Milk Crates not included

Sale Price: $ 2,075.00
Material: Steel
Color: Black Hammertone
Max. Capacity: 1,000 lbs. / 454 kgs.
Weight: 280 lbs. / 127.3 kgs.
Dimensions: L60" x W28" x H68 1/2"
L152.4cm x W71.1cm x H174cm

Features:
- Holds (5) Combo Stands
- (2) Adjustable Shelf (L50 3/8" x W27 1/2") (L128cm x W70cm)
- Bottom Section (L50 1/2" x W27 1/2") (L128.3cm x W70cm)
- Jockey Box Holds (2) Half Milk Crates
- Wheels (2) 10" Swivel Casters & (2) 10" Rigid Casters (Optional (2) 10" Swivel Casters & (4) 10" Rigid Casters)
- Foot Brake
- Pull Bar
- Foam Filled Tires

Accessories:
- Additional Adjustable Shelf **(E-05 SHELF)** $ 265.00

Options:
- Milk Crate **(B-03)** $ 20.00
- Half Milk Crate **(B-05)** $ 20.00
- Full Milk Crate Liner **(B-04)** $ 12.50
- Half Milk Crate Liner **(B-06)** $ 12.00
- Additional (2) 10" Pneumatic Rigid Caster Wheel **(W-10 RCX)** $ 119.00
- Additional (2) 10" Foam Filled Tires **(WA-10 FOAM CTR)** $ 98.00

Replacement parts:
- 10" Foam Filled Rigid Caster Wheel **(W-10 RCX / WA-10 FOAM CTR)** $ 108.50
- 10" Foam Filled Swivel Caster Wheel **(W-10 SCX / WA-10 FOAM CTR)** $ 114.00

Shipping Dimensions: L61" x W29" x H69" (295 lbs.)
L155cm x W73.7cm x H175.3cm (134 kgs.)

Universal Senior Cart

Part No. E-04

Sale Price: $ 2,395.00
Material: Steel
Color: Black Hammertone
Max. Capacity: 1,000 lbs. / 454 kgs.
Weight: 365 lbs. / 165.9 kgs.
Dimensions: L63" x W31" x H74"
L160cm x W78.7cm x H188cm

NOTE: Milk Crates not included

Features:
- (3) Adjustable Shelves (L54 7/8" x W29 1/2") (L139.4cm x W75cm)
- (1) Stationary Shelf (L55" x W30") (L140cm x W76.2cm)
- Jockey Box Holds (2) Half Milk Crates
- (2) Horizontal E-Track Locks
- Wheels (2) 10" Swivel Casters & (2) 10" Swivel Lock Casters
- Foot Brake
- Pull Bar
- Foam Filled Tires

Accessories:
- Additional Adjustable Shelf **(E-04 SHELF)** $ 286.00

Options:
- Milk Crate **(B-03)** $ 20.00
- Half Milk Crate **(B-05)** $ 20.00
- Full Milk Crate Liner **(B-04)** $ 12.50
- Half Milk Crate Liner **(B-06)** $ 12.00

Replacement parts:
- 10" Foam Filled Swivel Lock Caster Wheel **(W-10 SCX / WA-10 FOAM CTR & WA-10 SLOCK)** $ 127.00
- 10" Foam Filled Swivel Caster Wheel **(W-10 SCX / WA-10 FOAM CTR)** $ 114.00
- Swivel Lock Plunger **(WA-10 SLOCK)** $ 13.00

Shipping Dimensions: L64" x W32" x H75" (380 lbs.)
L162.6cm x W81.3cm x H190.5cm (172.7 kgs.)

Backstage Equipment, Inc. Toll Free (800) 692-2787 • Tel (818) 504-6026 • Fax (818) 504-6180 • info@backstageweb.com • www.backstageweb.com

Cable Cart

Part No. GE-02

Sale Price: $ 860.00
Material: Steel
Color: Black Hammertone
Max. Capacity: 1,000 lbs. / 454 kgs.
Weight: 97 lbs. / 44 kgs.
Dimensions: L42 1/2" x W28 1/2" x H45 1/2"
L108cm x W72.4cm x H116cm

Features:
- Holds Cables, Sandbags, Sands, Milk Crates
- Carriage Base D21 1/2" x W20" (D54.6cm x W50.8cm)
- (4) 10" Pneumatic Offset Wheels
- Hand Brake

Accessories:

Options:
- Foam Filled Tires **(WA-10 FOAM OS)** $ 196.00

Replacement parts:
- 10" Pneumatic Tire **(WA-10 TIRE)** $ 23.00
- 10" Pneumatic Tube **(WA-10 TUBE)** $ 8.75
- 10" Pneumatic Offset Wheel **(W-10 OS34X)** $ 47.50
- 3/4" Sealed Bearing **(WA-34 BR)** $ 2.75 (Need (2) per Wheel)

Shipping Dimensions: L52" x W31" x H31" (107 lbs.)
L132.1cm x W78.8cm x H78.8cm (48.6 kgs.)

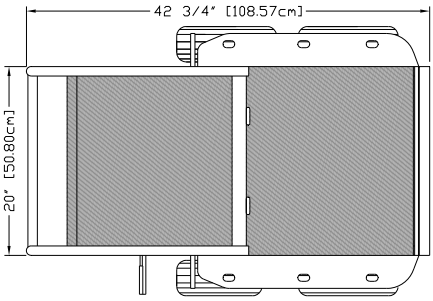

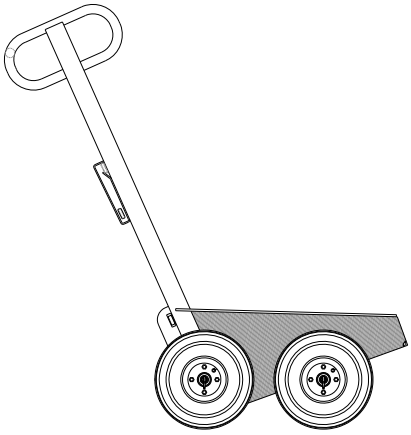

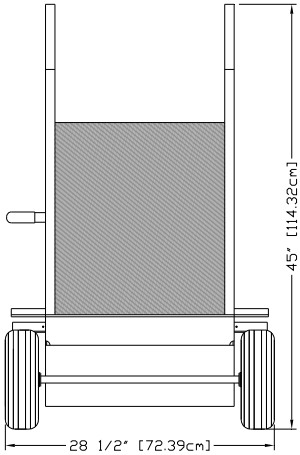

Cable Cart (Foldable)

Part No. GE-02 FD

Sale Price: $ 1,020.00
Material: Steel
Color: Black Hammertone
Max. Capacity: 1,000 lbs. / 454 kgs.
Weight: 110 lbs. / 50 kgs.
Dimensions: L42 1/2" x W28 1/2" x H45 1/2"
L108cm x W72.4cm x H116cm
L35 15/16" x W28 1/2" x H20 1/4" (Folded)
L91.3cm x W72.4cm x H51.4cm

Features:
- Folds to a compact size (Folding mechanism uses Quick ReleaseAircraft Pins to lock system into place)
- Holds Cable and Sandbags
- Carriage Base (D21 1/2" x W20" / D54.6cm x W50.8cm)
- (4) 10" Pneumatic Offset Wheels
- Hand Brake

Accessories:

Options:
- Foam Filled Tires **(WA-10 FOAM OS)** $ 196.00

Replacement parts:
- 10" Pneumatic Tire **(WA-10 TIRE)** $ 23.00
- 10" Pneumatic Tube **(WA-10 TUBE)** $ 8.75
- 10" Pneumatic Offset Wheel **(W-10 OS34X)** $ 47.50
- 3/4" Sealed Bearing **(WA-34 BR)** $ 2.75 (Need (2) per Wheel)

Shipping Dimensions: L30" x W22" x H38" (125 lbs.)
L76.2cm x W55.9cm x H96.5cm (56.8kgs.)

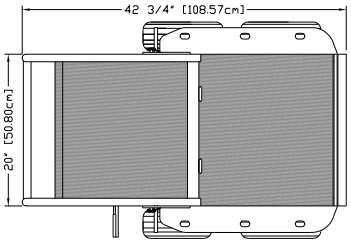

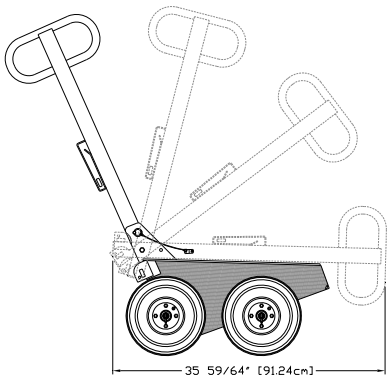

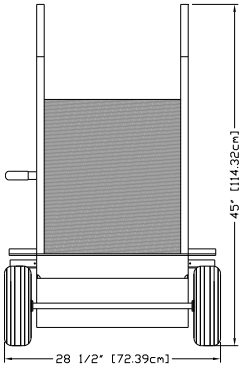

Backst age Equipment, Inc. Toll Free (800) 692-2787 • Tel (818) 504-6026 • Fax (818) 504-6180 • info@backstageweb.com • www.backstageweb.com

Muscle Cart

Part No. GE-01

Sale Price: $ 965.00
Material: Steel
Color: Black Hammertone
Max. Capacity: 1,000 lbs. / 454 kgs.
Weight: 92 lbs. / 41.8 kgs.
Dimensions: L35 3/4" x W30 1/2" x H45 3/4"
L91.4cm x W76.2cm x H115.6cm

Features:
• Holds Cables, Sandbags, Sands, Milk Crates
• Carriage Base D22 1/2" x W20 1/2" (D57.2cm x W52.1cm)
• (2) 10" Pneumatic Swivel Caster Wheels, (2) 10" Pneumatic Offset Wheels
• Hand Brake

Accessories:

Options:
• Foam Filled Tires **(WA-10 FOAM OS)** $ 98.00
• Foam Filled Tires **(WA-10 FOAM CTR)** $ 98.00

Replacement parts:
• 10" Pneumatic Tire **(WA-10 TIRE)** $ 23.00
• 10" Pneumatic Tube **(WA-10 TUBE)** $ 8.75
• 10" Pneumatic Swivel Caster Wheel **(W-10 SCX)** $ 65.00
• 10" Pneumatic Offset Wheel **(W-10 OS34X)** $ 47.50
• 3/4" Sealed Bearing **(WA-34 BR)** $ 2.75 (Need (2) per Wheel)

Shipping Dimensions: L52" x W31" x H31" (102 lbs.)
L132.1cm x W78.8cm x H78.8cm (46.4 kgs.)

Cable Distro Cart

Part No. GE-03

Sale Price: $ 1,810.00
Material: Steel
Color: Black Hammertone
Max. Capacity: 1,000 lbs. / 454 kgs.
Weight: 206 lbs. / 92.3 kgs.
Dimensions: L62" x W28" x H50"
L157.5cm x W71.1cm x H127cm

Features:
- Holds Milk Crates, Cable, Sand Bags, Ballasts
- (2) Stationary Shelves (L54" x W26") (L137.2cm x W66cm)
- Jockey Box Holds (2) Half Milk Crates
- Wheels (2) 10" Swivel Casters & (2) 10" Rigid Casters (Optional (2) 10" Swivel Casters & (4) 10" Rigid Casters)
- Foot Brake
- Pull Bar

Accessories:

Options:
- Milk Crate **(B-03)** $ 20.00
- Half Milk Crate **(B-05)** $ 20.00
- Full Milk Crate Liner **(B-04)** $ 12.50
- Half Milk Crate Liner **(B-06)** $ 12.00
- Foam Filled Tires **(WA-10 FOAM CTR)** $ 196.00
- Additional (2) 10" Pneumatic Rigid Caster Wheel **(W-10 RCX)** $ 119.00
- Additional (2) 10" Foam Filled Tires **(WA-10 FOAM CTR)** $ 98.00

NOTE: Milk Crates not included

Replacement parts:
- 10" Pneumatic Tire **(WA-10 TIRE)** $ 23.00
- 10" Pneumatic Tube **(WA-10 TUBE)** $ 8.75
- 10" Pneumatic Rigid Caster Wheel **(W-10 RCX)** $ 59.50
- 10" Pneumatic Swivel Caster Wheel **(W-10 SCX)** $ 65.00

Shipping Dimensions: L63" x W29" x H51" (218 lbs.)
L160cm x W73.7cm x H130cm (99 kgs.)

Backstage Equipment, Inc. Toll Free (800) 692-2787 • Tel (818) 504-6026 • Fax (818) 504-6180 • info@backstageweb.com • www.backstageweb.com

Whip Distro Cart

Part No. GE-08

Sale Price: $ 1,915.00
Material: Steel
Color: Black Hammertone
Max. Capacity: 1,000 lbs. / 454 kgs.
Weight: 180 lbs. / 81.8 kgs.
Dimensions: L60" x W28" x H49 1/2"
L152.4cm x W71.1cm x H125.7cm

Features:
- Holds Cable in Figure-8 or Wrapped
- Dual Hooks Hold (1) Full Size Milk Crate
- (1) Stationary Shelf (L54" x W26") (L137.2cm x W66cm)
- Jockey Box Holds (2) Half Milk Crates
- Wheels (2) 10" Swivel Casters & (4) 10" Rigid Casters
- Foot Brake
- Pull Bar

Accessories:
- 100/60 Amp Bate Holder **(GE-08 BH)** $ 265.00

Options:
- Milk Crate **(B-03)** $ 20.00
- Half Milk Crate **(B-05)** $ 20.00
- Full Milk Crate Liner **(B-04)** $ 12.50
- Half Milk Crate Liner **(B-06)** $ 12.00
- Foam Filled Tires **(WA-10 FOAM CTR)** $ 294.00

NOTE: Milk Crates not included

Replacement parts:
- 10" Pneumatic Tire **(WA-10 TIRE)** $ 23.00
- 10" Pneumatic Tube **(WA-10 TUBE)** $ 8.75
- 10" Pneumatic Rigid Caster Wheel **(W-10 RCX)** $ 59.50
- 10" Pneumatic Swivel Caster Wheel **(W-10 SCX)** $ 65.00

Shipping Dimensions: L61" x W29" x H51" (195 lbs.)
L155cm x W73.7cm x H130cm (88.6 kgs.)

Stinger Cart

Part No. E-15

Sale Price: $ 645.00
Material: Steel
Color: Black Hammertone
Max. Capacity: 500 lbs. / 227.3 kgs.
Weight: 70 lbs. / 31.8 kgs.
Dimensions: L28 1/4" x W21" x H48 3/4"
L71.8cm x W53.3cm x H123.8cm

Features:
• Holds (35) 50'Stingers
• (2) 10" Pneumatic Offset Wheels

Accessories:

Options:
• Foam Filled Tires **(WA-10 FOAM OS)** $ 98.00

Replacement parts:
• 10" Pneumatic Tire **(WA-10 TIRE)** $ 23.00
• 10" Pneumatic Tube **(WA-10 TUBE)** $ 8.75
• 10" Pneumatic Offset Wheel **(W-10 OS34X)** $ 47.50
• 3/4" Sealed Bearing **(WA-34 BR)** $ 2.75 (Need (2) per Wheel)

Shipping Dimensions: L16" x W26" x H38" (79 lbs.)
L40.6cm x W66cm x H96.5cm (35.9 kgs.)

Cable X-Over Cart

Part No. E-13

Sale Price: $ 835.00
Material: Steel
Color: Black Hammertone
Max. Capacity: 600 lbs. / 272.7 kgs.
Weight: 49 lbs. / 22.3 kgs.
Dimensions: L36 3/8" x W24 3/8" x H43"
L92.4cm x W61.9cm x H109.2cm

Features:
- Holds (12) Cross-Overs
- (2) 6” Balloon Swivel Caster Wheels with Brakes, (2) 10” Pneumatic Offset Wheels
- Hand Brake

Accessories:

Options:
- Foam Filled Tires **(WA-10 FOAM OS)** $ 98.00

Replacement parts:
- 6” Balloon Swivel Caster Wheel with Brake **(W-06 SCBRX BLN-GR)** $ 29.00
- 10” Pneumatic Tire **(WA-10 TIRE)** $ 23.00
- 10” Pneumatic Tube **(WA-10 TUBE)** $ 8.75
- 10” Pneumatic Offset Wheel **(W-10 OS34X)** $ 47.50
- 3/4” Sealed Bearing **(WA-34 BR)** $ 2.75 (Need (2) per Wheel)

Shipping Dimensions: L52” x W31” x H20” (62 lbs.)
L132.1cm x W78.7cm x H50.8cm (28.2 kgs.)

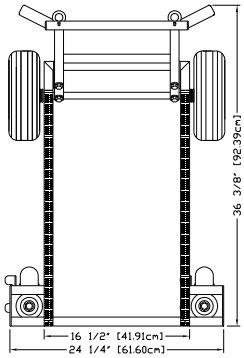

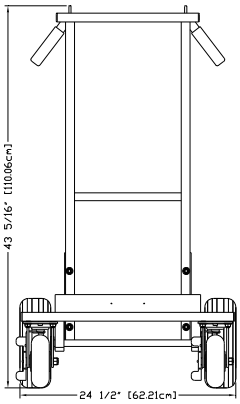

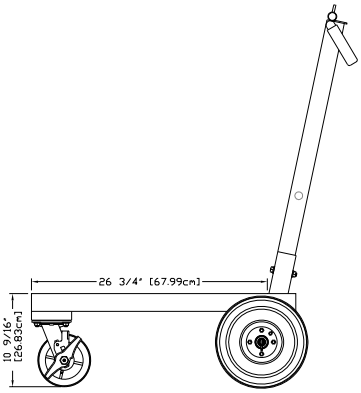

C-Stand Cart

Part No. GE-04

Sale Price: $ 860.00
Material: Steel
Color: Black Hammertone
Max. Capacity: 800 lbs. / 364 kgs.
Weight: 64 lbs. / 29.1 kgs.
Dimensions: L37 1/4" x W25" x H58 1/4"
L94.7cm x W63.5cm x H148cm

Features:
• Holds (18-20) C-Stands
• (2) 6” Balloon Swivel Caster Wheels with Brakes, (2) 10” Pneumatic Offset Wheels

Accessories:

Options:
• Foam Filled Tires **(WA-10 FOAM OS)** $ 98.00

Replacement parts:
• 6” Balloon Swivel Caster Wheel with Brake **(W-06 SCBRX BLN-GR)** $ 29.00
• 10” Pneumatic Tire **(WA-10 TIRE)** $ 23.00
• 10” Pneumatic Tube **(WA-10 TUBE)** $ 8.75
• 10” Pneumatic Offset Wheel **(W-10 OS34X)** $ 47.50
• 3/4” Sealed Bearing **(WA-34 BR)** $ 2.75 (Need (2) per Wheel)

Shipping Dimensions: L36” x W26” x H60” (77 lbs.)
L91.4cm x W66cm x H152.4cm (35 kgs.)

Backstage Equipment, Inc. Toll Free (800) 692-2787 • Tel (818) 504-6026 • Fax (818) 504-6180 • info@backstageweb.com • www.backstageweb.com

C-Stand Cart Plus

Part No. GE-04 PLUS

Sale Price: $ 1,000.00
Material: Steel
Color: Black Hammertone
Max. Capacity: 800 lbs. / 364 kgs.
Weight: 78 lbs. / 35.5 kgs.
Dimensions: L38" x W25" x H60 3/4"
L96.5cm x W63.5cm x H154.3cm

Features:
- Holds (18-20) C-Stands
- (2) 8" Pneumatic Swivel Caster Wheels, (2) 10" Pneumatic Offset Wheels
- Hand Brake

Accessories:

Options:
- 10" Foam Filled Tires **(WA-10 FOAM OS)** $ 98.00
- 8" Foam Filled Tires **(WA-08 FOAM CTR)** $ 86.00

Replacement parts:
- 8" Pneumatic Tire **(WA-08 TIRE)** $ 18.00
- 8" Pneumatic Tube **(WA-08 TUBE)** $ 8.00
- 8" Pneumatic Swivel Caster Wheel **(W-08 SCX)** $ 51.00
- 10" Pneumatic Tire **(WA-10 TIRE)** $ 23.00
- 10" Pneumatic Tube **(WA-10 TUBE)** $ 8.75
- 10" Pneumatic Offset Wheel **(W-10 OS34X)** $ 47.50
- 3/4" Sealed Bearing **(WA-34 BR)** $ 2.75 (Need (2) per Wheel)

Shipping Dimensions: L36" x W26" x H60" (93 lbs.)
L91.4cm x W66cm x H152.4cm (42.3 kgs.)

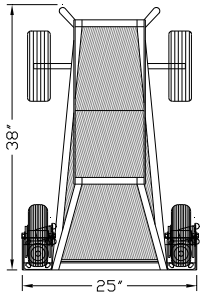

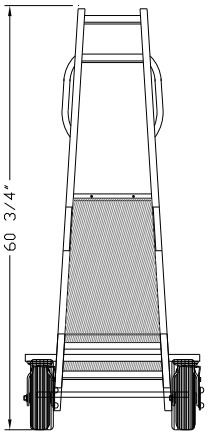

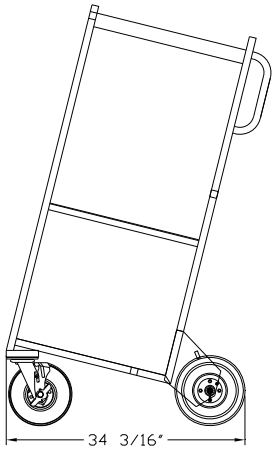

C-Stand Cart (Collapsible)

Part No. GE-04 TR

Sale Price: $ 965.00
Material: Steel
Color: Black Hammertone
Max. Capacity: 800 lbs. / 364 kgs.
Weight: 80 lbs. / 36.4 kgs.
Dimensions: L33" x W25" x H60"
L83.8cm x W63.5cm x H152.4cm

Features:
- Breaks down to less than half its size
- Holds (14) C-Stands
- (2) 6” Balloon Swivel Caster Wheels with Brakes, (2) 10” Pneumatic Offset Wheels

Accessories:

Options:
- Foam Filled Tires **(WA-10 FOAM OS)** $ 98.00

Replacement parts:
- 6” Balloon Swivel Caster Wheel with Brake **(W-06 SCBRX BLN-GR)** $ 29.00
- 10” Pneumatic Tire **(WA-10 TIRE)** $ 23.00
- 10” Pneumatic Tube **(WA-10 TUBE)** $ 8.75
- 10” Pneumatic Offset Wheel **(W-10 OS34X)** $ 47.50
- 3/4” Sealed Bearing **(WA-34 BR)** $ 2.75 (Need (2) per Wheel)

Shipping Dimensions: L30” x W25” x H25” (82 lbs.)
L76.2cm x W63.5cm x H63.5cm (37.3 kgs.)

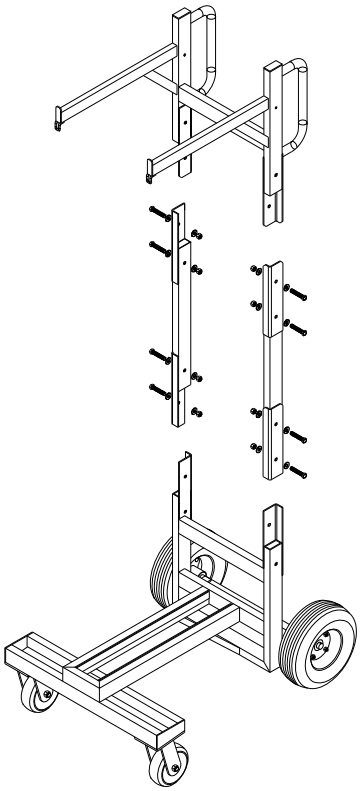

Backstage Equipment, Inc. Toll Free (800) 692-2787 • Tel (818) 504-6026 • Fax (818) 504-6180 • info@backstageweb.com • www.backstageweb.com

Magliner Self Stabilizing C-Stand Cart

Part No. MAG-01 SS CS-10X

Sale Price: $ 745.00
Material: Aluminum (80%) Steel (20%)
Color: Natural Aluminum / Semi Gloss Black
Max. Capacity: 500 lbs. / 227.3 kgs.
Weight: 42 lbs. / 19 kgs.
Dimensions: D39” x W20 1/2" x H44"
L99cm x W52cm x H1 11.7cm

Features:
- Self Stabilizing Hand Truck
- Accomodates (10) C-Stands with Arms and Knuckles (20” & 40”)
- Horizontal Loop Handle with Vinyl Sleeve
- Large 20” x 12 3/4” Base Plate
- Wheels: (2) 10” Swivel Casters & (2) 5” Rotacaster Double Row Multi-Directional Wheels

Accessories:
- Utility Box **(MAG-01 SS UB)** $ 175.00

Options:
- Foam Filled Tires (2) **(WA-10 FOAM OS)** $ 98.00

Replacement parts:
- 10” Pneumatic Offset Wheel with 5/8” Bearings **(W-10 OS58X)** $ 47.50
- 10” Pneumatic Tire **(WA-10 TIRE)** $ 23.00
- 10” Pneumatic Tube **(WA-10 TUBE)** $ 8.75
- 5” Rotacaster Double Row Multi-Directional Wheel **(W-05 RC-DR)** $ 40.00

Shipping Dimensions: L13” x W22” x H51” (50 lbs.) Assembled
L33cm x W55.9cm x H129.5cm (22.3 kgs.)

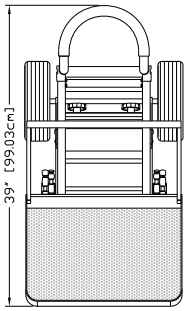

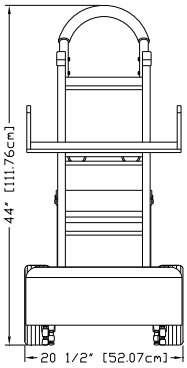

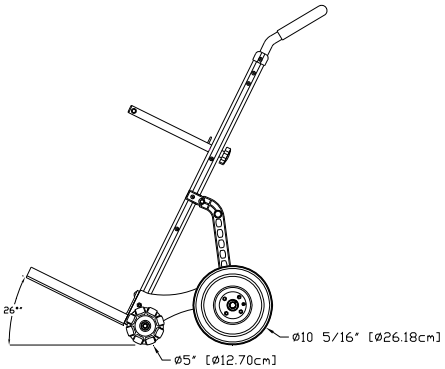

Magliner Self Stabilizing C-Stand Cart (UK)

Part No. MAG-01 SS CS-10X UK

Sale Price: $ 875.00
Material: Aluminum (80%) Steel (20%)
Color: Natural Aluminum / Semi Gloss Black
Max. Capacity: 500 lbs. / 227.3 kgs.
Weight: 49 lbs. / 22.3 kgs.
Dimensions: D39" x W20 1/2" x H44"
L99cm x W52cm x H1 11.7cm

Utility Box **(MAG-01 SS UB)**
(D8" x W14" x H6" / D20.3cm x W35.6cm x H15.2 cm)

Features:
- Self Stabilizing Hand Truck
- Accomodates (10) C-Stands (20" & 40")
- Accomodates (10) C-Stand Arms
- Accomodates (10) C-Stands Knuckles (Optional)
- Horizontal Loop Handle with Vinyl Sleeve
- Large 20" x 14" Base Plate
- Wheels: (2) 10" Swivel Casters & (2) 5" Rotacaster Double Row Multi-Directional Wheels

Accessories:
- Utility Box **(MAG-01 SS UB)** $ 175.00

Options:
- Foam Filled Tires (2) **(WA-10 FOAM OS)** $ 98.00

Replacement parts:
- 10" Pneumatic Offset Wheel with 5/8" Bearings **(W-10 OS58X)** $ 47.50
- 10" Pneumatic Tire **(WA-10 TIRE)** $ 23.00
- 10" Pneumatic Tube **(WA-10 TUBE)** $ 8.75
- 5" Rotacaster Double Row Multi-Directional Wheel **(W-05 RC-DR)** $ 40.00

Shipping Dimensions: D16" x W22" x H51" (58 lbs.) Assembled
L40.6cm x W55.9cm x H129.5cm (26.4 kgs.)

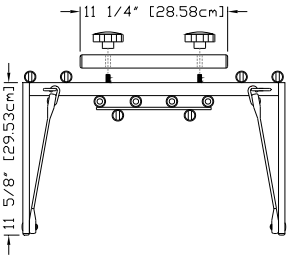

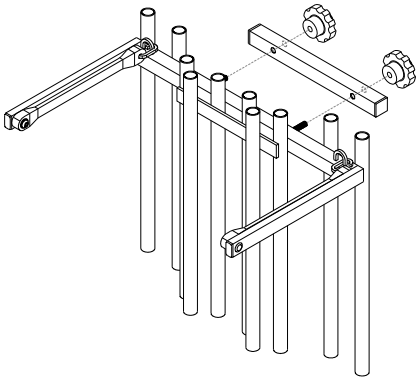

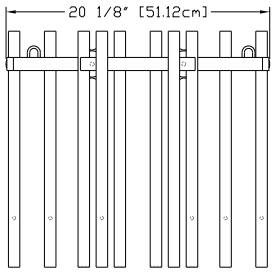

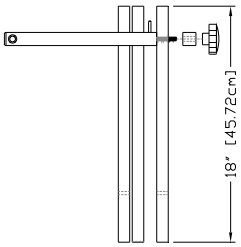

C-Stand/Hi-Roller Utility Cart

Part No. GE-13

Sale Price: $ 1,215.00
Material: Steel
Color: Black Hammertone
Max. Capacity: 800 lbs. / 364 kgs.
Weight: 88 lbs. / 40 kgs.
Dimensions: L34 1/2" x W24 1/2" x H57 3/4"
L87.6cm x W62.2cm x H146.7cm

Features:
• Holds (16) C-Stands
• Holds (2) Hi-Roller Stands or (2) Combo Stands
• Holds (2) Milk Crates
• Bottom Pan holds Sandbags (L18 3/4 x W13 3/4") (L47.6cm x W34.9cm)
• Top Tray (22" x W13 3/8") (L55.9cm x W34cm)
• (2) 6" Balloon Swivel Caster Wheels with Brakes, (2) 10" Pneumatic Offset Wheels

Accessories:

Options:
• Foam Filled Tires **(WA-10 FOAM OS)** $ 98.00

Replacement parts:
• 6" Balloon Swivel Caster Wheel with Brake **(W-06 SCBRX BLN-GR)** $ 29.00
• 10" Pneumatic Tire **(WA-10 TIRE)** $ 23.00
• 10" Pneumatic Tube **(WA-10 TUBE)** $ 8.75
• 10" Pneumatic Offset Wheel **(W-10 OS34X)** $ 47.50
• 3/4" Sealed Bearing **(WA-34 BR)** $ 2.75 (Need (2) per Wheel)

Shipping Dimensions: L36" x W26" x H60" (103 lbs.)
L91.4cm x W66cm x H152.4cm (46.9 kgs.)

NOTE: Milk Crates not included

C-Stand/Hi-Roller Utility Cart Plus

Part No. GE-13 PLUS

Sale Price: $ 1,865.00
Material: Steel
Color: Black Hammertone
Max. Capacity: 800 lbs. / 364 kgs.
Weight: 120 lbs. / 54.6 kgs.
Dimensions: L35" x W24 3/4" x H58 3/8"
L88.9cm x W62.9cm x H148.3cm

Features:
- Holds (19) C-Stands
- Holds (2) Hi-Roller Stands or (3) Low Combo Stands (Rear Section)
- Holds (2) Combo Stands or (2) Low Combo Stands (Front Section)
- Holds (2) Milk Crates
- Built-in Utility Boxes (2) D8" x W13 1/4" x H4" (D20.3cm x W33.7cm x H10.2cm)
- Bottom Pan holds Sandbags (L19 3/4 x W13 3/4" x H3") (L47.6cm x W34.9cm x H7.6cm)
- Top Tray (26" x W13 3/8") (L66cm x W34cm)
- Hand Brake
- (2) 8" Pneumatic Swivel Caster Wheels, (2) 10" Pneumatic Offset Wheels

Accessories:

Options:
- Full Milk Crate **(B-05)** $ 20.00
- Foam Filled Tires **(WA-10 FOAM OS)** $ 98.00
- Foam Filled Tires **(WA-08 FOAM CTR)** $ 86.00

Replacement parts:
- 8" Pneumatic Swivel Caster Wheels **(W-08 SCX)** $ 51.00
- 8" Pneumatic Tire **(WA-08 TIRE)** $ 18.00
- 8" Pneumatic Tube **(WA-8 TUBE)** $ 8.00
- 10" Pneumatic Offset Wheel **(W-10 OS34X)** $ 47.50
- 10" Pneumatic Tire **(WA-10 TIRE)** $ 23.00
- 10" Pneumatic Tube **(WA-10 TUBE)** $ 8.75
- 3/4" Sealed Bearing **(WA-34 BR)** $ 2.75 (Need (2) per Wheel)

NOTE: Milk Crates not included

Shipping Dimensions: L36" x W26" x H60" (135 lbs.)
L91.4cm x W66cm x H152.4cm (61.4 kgs.)

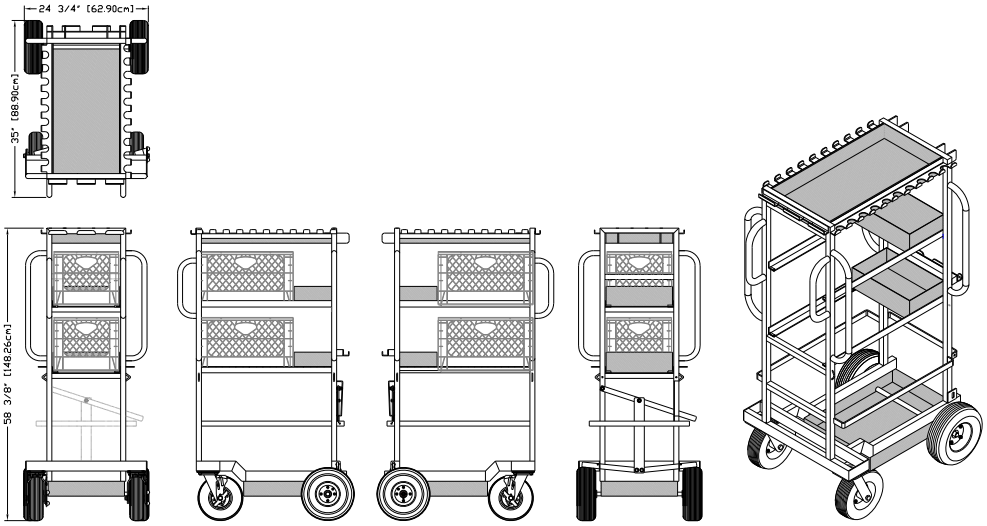

Backstage Equipment, Inc. Toll Free (800) 692-2787 • Tel (818) 504-6026 • Fax (818) 504-6180 • info@backstageweb.com • www.backstageweb.com

Combo/Hi-Roller Senior Cart

Part No. GE-15 SR

Sale Price: $ 2,080.00
Material: Steel
Color: Black Hammertone
Max. Capacity: 1,000 lbs. / 454 kgs.
Weight: 215 lbs. / 97.7 kgs.
Dimensions: L49 1/2" x W26 3/8" x H68"
L125.7cm x W67cm x H172.7cm

Features:
- Holds (20) C-Stands
- Holds (10) C-Stand Grip Head and Arms
- Holds (3) Mombo Combo Stands or Hi-Roller Stands
- Holds (10) Combo Stands
- Jockey Box Holds (1) Half Milk Crate
- Utility Storage Space (L15" x W25 1/2" x H2") (L38.1cm x W64.8cm x H5cm)
- Wheels (2) 10" Swivel Casters & (4) 10" Rigid Casters
- Large "D" Style Push Handles
- Food Brake
- Pull Bar

Accessories:

Options:
- Foam Filled Tires **(WA-10 FOAM CTR)** $ 294.00

Replacement parts:
- 10" Pneumatic Tire **(WA-10 TIRE)** $ 23.00
- 10" Pneumatic Tube **(WA-10 TUBE)** $ 8.75
- 10" Pneumatic Rigid Caster Wheel **(W-10 RCX)** $ 59.50
- 10" Pneumatic Swivel Caster Wheel **(W-10 SCX)** $ 65.00

Shipping Dimensions: L50" x W27" x H69" (225 lbs.)
L127cm x W68.6cm x H175.3cm (102.3 kgs.)

NOTE: Milk Crates not included

Combo/Hi-Roller Junior Cart

Part No. GE-15 JR

Sale Price: $ 1,700.00
Material: Steel
Color: Black Hammertone
Max. Capacity: 1,000 lbs. / 454 kgs.
Weight: 135 lbs. / 61.4 kgs.
Dimensions: L36 1/2" x W26" x H67"
L92.7cm x W66cm x H170.2cm

Features:
- Holds (20) C-Stands
- Holds (12) C-Stand Grip Head and Arms
- Holds (2) Mombo Combo Stands and (2) Hi-Roller Stands or (4) Hi-Roller Stands
- Holds (4) Combo Stands
- Utility Storage Space (L28 x W15" x H2") (L71.1cm x W38.1cm x H5cm)
- Wheels (2) 10" Swivel Casters & (2) 10" Rigid Casters
- Large "D" Style Push Handles
- Food Brake
- Pull Bar

Accessories:

Options:
- Foam Filled Tires **(WA-10 FOAM CTR)** $ 196.00

Replacement parts:
- 10" Pneumatic Tire **(WA-10 TIRE)** $ 23.00
- 10" Pneumatic Tube **(WA-10 TUBE)** $ 8.75
- 10" Pneumatic Rigid Caster Wheel **(W-10 RCX)** $ 59.50
- 10" Pneumatic Swivel Caster Wheel **(W-10 SCX)** $ 65.00

Shipping Dimensions: L37" x W27" x H68" (150 lbs.)
L94cm x W68.6cm x H172.7cm (68.2 kgs.)

C-Stand/Combo Utility Cart

Part No. GE-17

Sale Price: $ 1,865.00
Material: Steel
Color: Black Hammertone
Max. Capacity: 1,000 lbs. / 454 kgs.
Weight: 186 lbs. / 84.6 kgs.
Dimensions: L41 1/16" x W29" x H66"
L104.3cm x W73.7cm x H167.6cm

Features:
- Holds (22) C-Stands or (6) Combo Stands and (4) Low combo Stands
- Hold (4) C-Stand Gobo Head and Arms
- Rear Built-in Bracket Holds optional Net Basket
- Upper Section D29 3/4" x W12" - 13" x H6" (L75.6cm x W30.5cm - 33cm x H15.2)
- Upper Drawer D29 1/2 x W13 1/2" x H6 1/2" (D74.9cm x W34.3cm x H16.5cm)
- Lower Drawer with Nail and Spraycan Compartments (D29 1/2 x W13 1/2" x H8") (D74.9cm x W34.3cm x H20.3cm)
- Belly Compartment Holds Sand Bags L23 3/4 x W18" x H7 1/4" (L60.3cm x W45.7cm x H18.4cm)
- Wheels (2) 10" Swivel Casters & (2) 16" Cable Crawler Wheels
- Large "D" Style Push / Pull Handles on Front and Rear of Cart
- Food Brake
- Pull Bar

Accessories:
- Net Basket 24" x 36" (61cm x 92cm) (Triple) **(B-02T)** $ 425.00
- Net Basket Mobile 24" x 36" (61cm x 92cm) (Triple) **(B-02T MOB)** $ 495.00
- Net Basket 24" x 36" (61cm x 92cm) (Double) **(B-02D)** $ 405.00
- Net Basket 18" x 24" (46cm x 61cm) (Double) **(B-01D)** $ 350.00

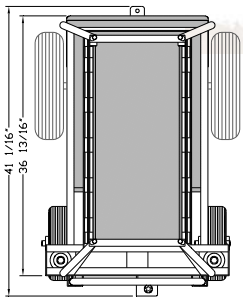

Options:
- 10" Foam Filled Tires **(WA-10 FOAM CTR)** $ 98.00
- 16" Foam Filled Tires **(WA-16 FOAM)** $ 162.00

Replacement parts:
- 10" Pneumatic Tire **(WA-10 TIRE)** $ 23.00
- 10" Pneumatic Tube **(WA-10 TUBE)** $ 8.75
- 16" Pneumatic Tire **(WA-16 TIRE)** $ 23.00
- 16" Pneumatic Tube **(WA-16 TUBE)** $ 9.75
- 5/8" Sealed Bearing **(WA-58BR)** $ 2.75 (2) needed per wheel)
- 3/4" Sealed Bearing **(WA-34BR)** $ 2.75 (2) needed per wheel)
- 10" Pneumatic Swivel Caster Wheel **(W-10 SCX)** $ 65.00
- 16" Foam Filled 16" Cable Crawler Wheel with 3/4" Bearings **(W-16 CC34X)** $ 120.00

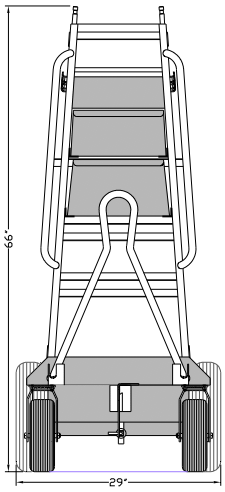

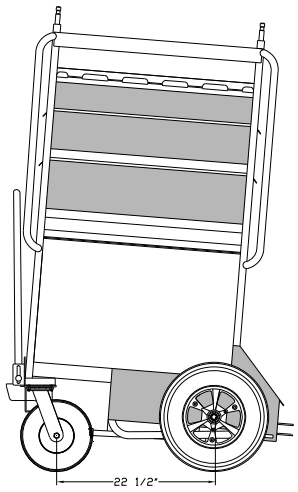

Shipping Dimensions: L42" x W30" x H67" (201 lbs.)
L106.7cm x W76.2cm x H170.2cm (91.4 kgs.)

Super Duz-All Cart

Part No. G-02

NOTE: Milk Crates not included

Sale Price: $ 2,295.00
Material: Steel
Color: Black Hammertone
Max. Capacity: 1,000 lbs. / 454 kgs.
Weight: 305 lbs. / 138.6 kgs.
Dimensions: L72" x W28" x H67 1/2" (With Net Basket)
L182.9cm x W71.1cm x H171.5cm
L60" x W28" x H67 1/2" (Without Net Basket)
L152.4cm" x W71.1cm x H171.5cm

Features:
- (1) Adjustable Shelf (L40 1/2" x W19 3/4") (L102.9cm x W50.2cm)
- (2) Stationary Shelves (L42" x W17.75") (L106.7cm x W45.1cm)
- C-Stand Brackets Hold (18) C-Stands
- (2) Telescopic Pull-Out Ladder Holders
- Detachable 24" x 36" (61cm x 91.4cm) Net Basket (Triple)
- Front Storage Pan (L13 1/2" x W18") (L34.3cm x W45.7cm)
- Rear 4 x 4 Rack Holds 15+ Flags (L54" x W7") (L137.2cm x W17.8cm)
- Jockey Box Holds (2) Half Milk Crates
- Wheels (2) 10" Swivel Casters & (2) 10" Rigid Casters (Optional (2) 10" Swivel Casters & (4) 10" Rigid Casters)
- Foot Brake
- Pull Bar

Accessories:
- Additional Adjustable Shelf **(G-02 SHELF)** $ 115.00

Options:
- Net Basket Wheels **(W-03 SCBRX (2) & W-03 SCX (2))** $ 76.00
- Milk Crate **(B-03)** $ 20.00
- Half Milk Crate **(B-05)** $ 20.00
- Full Milk Crate Liner **(B-04)** $ 12.50
- Half Milk Crate Liner **(B-06)** $ 12.00
- Foam Filled Tires **(WA-10 FOAM CTR)** $ 196.00
- Additional (2) 10" Pneumatic Rigid Caster Wheel **(W-10 RCX)** $ 119.00
- Additional (2) 10" Foam Filled Tires **(WA-10 FOAM CTR)** $ 98.00

Replacement parts:
- 10" Pneumatic Tire **(WA-10 TIRE)** $ 23.00
- 10" Pneumatic Tube **(WA-10 TUBE)** $ 8.75
- 10" Pneumatic Rigid Caster Wheel **(W-10 RCX)** $ 59.50
- 10" Pneumatic Swivel Caster Wheel **(W-10 SCX)** $ 65.00

Shipping Dimensions: L63" x W29" x H68" (324 lbs.)
L160cm x W73.7cm x H172.7cm (147.3 kgs.)

Backstage Equipment, Inc. Toll Free (800) 692-2787 • Tel (818) 504-6026 • Fax (818) 504-6180 • info@backstageweb.com • www.backstageweb.com

Speed Rail Cart

Part No. G-03

NOTE: Milk Crates not included

Sale Price: $ 2,295.00
Material: Steel
Color: Black Hammertone
Max. Capacity: 1,000 lbs. / 454 kgs.
Weight: 316 lbs. / 143.6 kgs.
Dimensions: L64 5/8" x W28 1/2" x H57"
L164.2cm x W72.4cm x H144.8cm

Features:
- Accommodates (12) pieces of each: 12”, 18”, x 24”, 30”, 36” and 40” S peed Rail Pipe
- Accommodates (40) pieces of 48” S peed Rail Pipe
- (7) Sliding Milk Crate Compartments
- Top Work Tray (L42” x W18” x H2”) (L106.7cm x W45.7cm, H5cm)
- Rear Storage Area (L42” x W5” x H38 1/2”) (L106.7cm x W12.7cm x H97.8cm)
- (3) Drawers (D17” x W27 1/4” x H3”) (D43.2cm x W69.2cm x H7.6cm)
- Pipe Holder with locking knob to assist in cutting
- Jockey Box Holds (2) Half Milk Crates
- Wheels (2) 10” Swivel Casters & (2) 10” Rigid Casters
  (Optional (2) 10” Swivel Casters & (4) 10” Rigid Casters)
- Foot Brake
- Pull Bar
- (2) Locking Bars

Accessories:
- Rear Fold-Down Table **(TB-42)** $ 265.00
- Pull-out Work Board D19” x W27 1/4” x H3/4” (D48.3cm x W69.2cm x H1.9cm)
  (DRAWER-501 B) $ 81.00

Options:
- Milk Crate **(B-03)** $ 20.00
- Half Milk Crate **(B-05)** $ 20.00
- Full Milk Crate Liner **(B-04)** $ 12.50
- Half Milk Crate Liner **(B-06)** $ 12.00
- Foam Filled Tires **(WA-10 FOAM CTR)** $ 196.00
- Additional (2) 10” Pneumatic Rigid Caster Wheel **(W-10 RCX)** $ 119.00
- Additional (2) 10” Foam Filled Tires **(WA-10 FOAM CTR)** $ 98.00

Replacement parts:
- 10” Pneumatic Tire **(WA-10 TIRE)** $ 23.00
- 10” Pneumatic Tube **(WA-10 TUBE)** $ 8.75
- 10” Pneumatic Rigid Caster Wheel **(W-10 RCX)** $ 59.50
- 10” Pneumatic Swivel Caster Wheel **(W-10 SCX)** $ 65.00

Shipping Dimensions: L65” x W29” x H58” (331 lbs.)
L165.1cm x W73.7cm x H147.3cm (150.5 kgs.)

Grande 4 X 4 Cart

Part No. G-01

Sale Price: $ 1,700.00
Material: Steel
Color: Black Hammertone
Max. Capacity: 1,000 lbs. / 454 kgs.
Weight: 220 lbs. / 100 kgs.
Dimensions: L60" x W28" x H66 1/2"
L152.4cm x W71.1cm x H168.1cm

Features:
- Holds 42+ Flags, (2) 42” x 42” Reflectors & (10) Cutters
- Holds (5) Combo Stands
- Top Gel Storage Pan (L50” x W28” x H2”) (L127cm x W71.1cm x H5cm)
- Jockey Box Holds (2) Half Milk Crates
- Wheels (2) 10” Swivel Casters & (2) 10” Rigid Casters
  (Optional (2) 10” Swivel Casters & (4) 10” Rigid Casters)
- Foot Brake
- Pull Bar

Accessories:
- Gel Holder Detachable Rack (Holds 16 gels) **(GEL G-01)** $ 265.00
- Net Basket 24” x 36” (61cm x 92cm) (Triple) **(B-02T)** $ 425.00
- Net Basket Mobile 24” x 36” (61cm x 92cm) (Triple) **(B-02T MOB)** $ 495.0
- Net Basket 24” x 36” (61cm x 92cm) (Double) **(B-02D)** $ 405.00
- Net Basket 18” x 24” (46cm x 61cm) (Double) **(B-01D)** $ 350.00

Options:
- Half Milk Crate **(B-05)** $ 20.00
- Half Milk Crate Liner **(B-06)** $ 12.00
- Foam Filled Tires **(WA-10 FOAM CTR)** $ 196.00
- Additional (2) 10” Pneumatic Rigid Caster Wheel **(W-10 RCX)** $ 119.00
- Additional (2) 10” Foam Filled Tires **(WA-10 FOAM CTR)** $ 98.00

NOTE: Milk Crates not included

Replacement parts:
- 10” Pneumatic Tire **(WA-10 TIRE)** $ 23.00
- 10” Pneumatic Tube **(WA-10 TUBE)** $ 8.75
- 10” Pneumatic Rigid Caster Wheel **(W-10 RCX)** $ 59.50
- 10” Pneumatic Swivel Caster Wheel **(W-10 SCX)** $ 65.00

Shipping Dimensions: L60” x W29” x H67” (230 lbs.)
L152.4cm x W73.7cm x H170.2cm (104.6 kgs.)

Backstage Equipment, Inc. Toll Free (800) 692-2787 • Tel (818) 504-6026 • Fax (818) 504-6180 • info@backstageweb.com • www.backstageweb.com

4 X 4 Coaster Senior Cart

Part No. G-12

Sale Price: $ 945.00
Material: Steel
Color: Black Hammertone
Max. Capacity: 800 lbs. / 364 kgs.
Weight: 90 lbs. / 40.9 kgs.
Dimensions: L52 3/8" x W21 1/4" x H42 7/8"
L133cm x W54cm x H108.9cm

Features:
- Fits easily into van or small truck
- Holds (36) 4 x 4 Flags
- Door Swing Bracket allows you to load from front of cart
- Wheels (2) 8” Swivel Casters with Brake & (2) 8” Rigid Casters

Accessories:
- Gel Holder Detachable Rack (Holds 16 gels) **(GEL-G-01)** $ 265.00
- Net Basket 24” x 36” (61cm x 92cm) (Triple) **(B-02T)** $ 425.00
- Net Basket Mobile 24” x 36” (61cm x 92cm) (Triple) **(B-02T MOB)** $ 495.00
- Net Basket 24” x 36” (61cm x 92cm) (Double) **(B-02D)** $ 405.00
- Net Basket 18” x 24” (46cm x 61cm) (Double) **(B-01D)** $ 350.00

Options:
- Foam Filled Tires **(WA-08 FOAM CTR)** $ 172.00

Replacement parts:
- 8” Pneumatic Tire **(WA-08 TIRE)** $ 18.00
- 8” Pneumatic Tube **(WA-08 TUBE)** $ 8.00
- 8” Pneumatic Swivel Caster Wheel **(W-08 SCBRX)** $ 53.50
- 8” Pneumatic Rigid Caster Wheel **(W-08 RCX)** $ 48.00

Shipping Dimensions: L54” x W22” x H44” (106 lbs.)
L137.2cm x W55.9cm x H111.8cm (48.2 kgs.)

4 X 4 Coaster Junior Cart

Part No. G-11

Sale Price: $ 835.00
Material: Steel
Color: Black Hammertone
Max. Capacity: 700 lbs. / 318 kgs.
Weight: 60 lbs. / 27.3 kgs.
Dimensions: L52 1/4" x W22 1/2" x H39 3/4"
L132.7cm x W57.2cm x H101cm

Features:
- Fits easily into van or small truck
- Holds (24) 4 x 4 Flags
- Door Swing Bracket allows you to load from front of cart
- Wheels (2) 5” Thermal Swivel Casters with Brake & (2) 10” Pneumatic Offset Wheels

Accessories:
- Gel Holder Detachable Rack (Holds 16 gels) **(GEL-G-01)** $ 265.00
- Net Basket 24” x 36” (61cm x 92cm) (Triple) **(B-02T)** $ 425.00
- Net Basket Mobile 24” x 36” (61cm x 92cm) (Triple) **(B-02T MOB)** $ 495.00
- Net Basket 24” x 36” (61cm x 92cm) (Double) **(B-02D)** $ 405.00
- Net Basket 18” x 24” (46cm x 61cm) (Double) **(B-01D)** $ 350.00

Options:
- Foam Filled Tires **(WA-10 FOAM OS)** $ 98.00

Replacement parts:
- 5" Thermal Swivel Caster with Brake **(W-05 SCBRX)** $ 23.00
- 10” Pneumatic Tire **(WA-10 TIRE)** $ 23.00
- 10” Pneumatic Tube **(WA-10 TUBE)** $ 8.75
- 10” Pneumatic Offset Wheel **(W-10 OS34X)** $ 47.50
- 3/4” Sealed Bearing **(WA-34 BR)** $ 2.75 (Need (2) per Wheel)

Shipping Dimensions: L53” x W23” x H40” (80 lbs.)
L134.7cm x W58.4cm x H101.6cm (36.4 kgs.)

Backstage Equipment, Inc. Toll Free (800) 692-2787 • Tel (818) 504-6026 • Fax (818) 504-6180 • info@backstageweb.com • www.backstageweb.com

Grip Senior Cart

Part No. G-04

Sale Price: $ 2,575.00
Material: Steel
Color: Black Hammertone
Max. Capacity: 1,000 lbs. / 454 kgs.
Weight: 271 lbs. / 123.2 kgs.
Dimensions: L70 1/2" x W29" x H65 1/4" (With Net Basket)
L179cm x W73.7cm x H165.7cm
L56 1/2" x W29" x H65 1/4" (Without Net Basket)
L143.5cm" x W73.7cm x H165.7cm

Features:
- Holds (22) C-Stands (Stacking Heads not required)
- Holds (14) Full Apple Boxes or (9) Milk Crates or combination
- Holds Sandbags
- Rear Storage Area (L28” x W24” x H32”) (L71.1cm x W61cm x H81.3cm)
- Front Storage Area (L20” x W13 1/2” x H37”) (L71.1cm x W34.3cm x H94cm)
- Flag Area holds (5) 24” x 18” (61cm x 46cm) Flags
- Top Storage Pan (L15” x W20” x H2”) (L38.1cm x W50.8cm x H5cm)
- Detachable 24” x 36” (61cm x 91.4cm) Net Basket (Triple)
- Detachable Wedge Holder
- Detachable Wedge/Cup Block Holder
- Jockey Box (D18” x W16 1/2” x H7”) (L45.7cm x W41.9cm x H17.8cm)
- Front Drawer with Nail and Spraycan Compartments (D22” x W13” x H8”) (D55.9cm x W33cm x H20.3cm)
- Rear Drawer (D24” x W23 1/4” x H8”) (D61cm x W59.1cm x H20.3cm)
- (2) 10” Foam Filled Swivel Caster Wheels & (2) 16” Foam Filled Cable Crawler Wheels
- Hand Brake
- Pull Bar

Accessories:

Options:
- Net Basket Wheels **(W-03 SCBRX (2) & W-03 SCX (2))** $ 81.00
- Milk Crate **(B-03)** $ 20.00
- Half Milk Crate **(B-05)** $ 20.00
- Full Milk Crate Liner **(B-04)** $ 12.50
- Half Milk Crate Liner **(B-06)** $ 12.00

Replacement parts:
- Grip Cart Large Drawer **(DRAWER-05)** $ 189.00
- Grip Cart Drawer w/ Dividers **(DRAWER-04)** $ 210.00
- Cup Block/Wedge Holder **(GA-01)** $ 265.00
- Wedge Holder **(GA-02)** $ 210.00
- 10” Foam Filled Swivel Caster Wheel **(W-10 SCX / WA-10 FOAM CTR)** $ 114.00
- 16” Foam Filled 16" Cable Crawler Wheel with 3/4" Bearings **(W-16 CC34X / WA-16 FOAM)** $ 201.00

Shipping Dimensions: L60” x W29” x H68” (250 lbs.) & L29” x W17” x H34” (36 lbs.)
L152.4cm x W73.7cm x H172.7cm (113.6 kgs.) &
L73.7cm x W43.2cm x H86.4cm (16.4 kgs.)

Grip Junior Cart

Part No. G-05

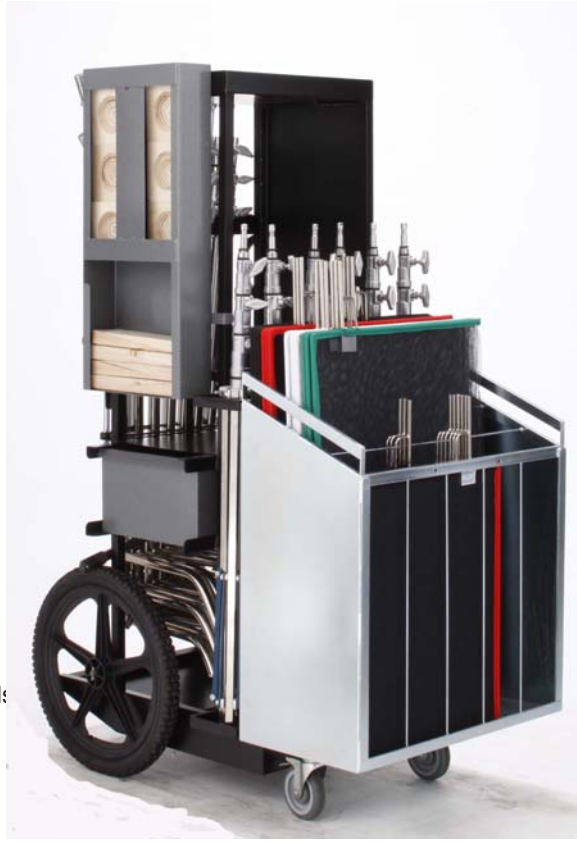

Sale Price: $ 2,135.00
Material: Steel
Color: Black Hammertone
Max. Capacity: 700 lbs. / 318 kgs.
Weight: 160 lbs. / 72.7 kgs.
Dimensions: L45 1/2" x W28" x H67" (With Net Basket)
L115.6cm x W71.1cm x H170.2cm
L38" x W28" x H67" (Without Net Basket)
L96.5cm" x W71.7cm x H170.2cm

Features:
- Holds (9) C-Stands
- Holds (5) Electric Baby Stands
- Holds (4) Full Apple Boxes or (3) Milk Crates or combination
- Holds Sandbags
- Top Storage Pan (L15” x W20” x H2”) (L38.1cm x W50.8cm x H5cm)
- Belly Compartment (L22 3/4” x W18”) (L57.8cm x W45.7cm)
- Detachable 24” x 36” (61cm x 91.4cm) Net Basket (Triple)
- Detachable Wedge/Cup Block Holder
- Drawer with Nail and Spraycan Compartments (D22” x W13” x H8”) (D55.9cm x W33cm x H20.3cm)
- Wheels (2) 5” Thermal Swivel Casters with Brake & (2) 20” Foam Filled Wheels
- Hand Brake

Accessories:
- Quad Rear Wheel Kit **(GE-07 F KIT)** $ 337.00 (Includes (2) Extension Axles & (2) additional 20” Foam Filled Wheels)

Options:
- Net Basket Wheels **(W-03 SBRX (2) & W-03 SCX (2))** $ 81.00
- Milk Crate **(B-03)** $ 20.00
- Half Milk Crate **(B-05)** $ 20.00
- Full Milk Crate Liner **(B-04)** $ 12.50
- Half Milk Crate Liner **(B-06)** $ 12.00

Replacement parts:
- 5" Thermal Swivel Caster with Brake **(W-05 SCBRX)** $ 23.00
- 20” Foam Filled 20" Wheel **(W-20 58X / WA-20 FOAM)** $ 131.00

Shipping Dimensions: L68" x W29" x H45" (185 lbs.) w/Pallet &
L29” x W17” x H34” (36 lbs.)
L172.7cm x W73.7cm x H114.3cm (84.1 kgs.) w/Pallet
L73.7cm x W43.2cm x H86.4cm (16.4 kgs.)

Backstage Equipment, Inc. Toll Free (800) 692-2787 • Tel (818) 504-6026 • Fax (818) 504-6180 • info@backstageweb.com • www.backstageweb.com

EZ-Load Grip/Electric Cart

Part No. GE-07

NOTE: Milk Crates not included

Sale Price: $ 1,990.00
Material: Steel
Color: Black Hammertone
Max. Capacity: 700 lbs. / 318 kgs.
Weight: 124 lbs. / 56.4 kgs.
Dimensions: L40 1/2" x W28" x H60" (With Net Basket)
L102.9cm x W71.1cm x H152.4cm
L36 1/2" x W28" x H60" (Without Net Basket)
L92.7cm" x W71.7cm x H152.4cm

Features:
- Self Locking System holds down Stands & Milk Crates when cart is laid down.
- Holds (8) C-Stands
- Holds (2) Combo Stands
- Holds (5) Electric Baby Stands
- (3) Sliding Milk Crate Compartments
- Holds Sandbags
- (2) Telescopic Pull-Out Ladder Holders
- Top Storage Pan (Holds (1) Milk Crate) (L15” x W20” x H2”) (L38.1cm x W50.8cm x H5cm)
- Belly Compartment (L22 3/4” x W18”) (L57.8cm x W45.7cm)
- Detachable 24” x 36” (61cm x 91.4cm) Net Basket (Double)
- Wheels (2) 5” Thermal Swivel Casters with Brake & (2) 20” Foam Filled Wheels
- Hand Brake

Accessories:
- Quad Rear Wheel Kit **(GE-07 F KIT)** $ 337.00 (Includes (2) Extension Axles & (2) additional 20” Foam Filled Wheels)

Options:
- Milk Crate **(B-03)** $ 20.00
- Half Milk Crate **(B-05)** $ 20.00
- Full Milk Crate Liner **(B-04)** $ 12.50
- Half Milk Crate Liner **(B-06)** $ 12.00

Replacement parts:
- 5" Thermal Swivel Caster with Brake **(W-05 SCBRX)** $ 23.00
- 20" Foam Filled Wheel **(W-20 58X / WA-20 FOAM)** $ 131.00

Shipping Dimensions: L62" x W27" x H43" (175 lbs.) w/Pallet &
L29” x W13” x H34” (27 lbs.)
L157.5cm x W68.6cm x H109.2cm (79.6 kgs.) w/pallet &
L73.7cm x W33cm x H86.4cm (12.3 kgs.)

Tube & Plywood Track Cart

Part No. G-06

Sale Price: $ 1,325.00
Material: Steel
Color: Black Hammertone
Max. Capacity: 800 lbs. / 364 lbs.
Weight: 115 lbs. / 52.3 kgs.
Dimensions: L37" x W28" x H61"
L94cm x W71.1cm x H155cm

Features:
- Holds (8) Pieces of Track and 4' x 8' Plywood
- Specialized Wheelbase for Tilting (Teeter Totter)
- Base Holds (2) Milk Crates
- Vertical Posts are Removable for Transportation
- Wheels (4) 6" Balloon Swivel Casters with Brake & (2) 10" Foam Filled Offset Wheels

Accessories:

Options:

Replacement parts:
- 6" Balloon Swivel Caster Wheel with Brake **(W-06 SCBRX BLN-GR)** $ 29.00
- 10" Foam Filled Wheel **(W-10 OS34X / WA-10 FOAM OS)** $ 96.50

Shipping Dimensions: L52" x W29" x H21" (164 lbs.) w/Pallet
L132.1cm x W73.7cm x H53.3cm (74.6 kgs.) w/Pallet

Backstage Equipment, Inc. Toll Free (800) 692-2787 • Tel (818) 504-6026 • Fax (818) 504-6180 • info@backstageweb.com • www.backstageweb.com

Utility Plywood / Track Cart

Part No. G-07

Sale Price: $ 1,775.00
Material: Steel
Color: Black Hammertone
Max. Capacity: 1,000 lbs. / 454 kgs.
Weight: 195 lbs. / 88.6 kgs.
Dimensions: L51 1/8" x W28 1/4" x H67 1/4"
L129.9cm x W71.8cm x H170.8cm

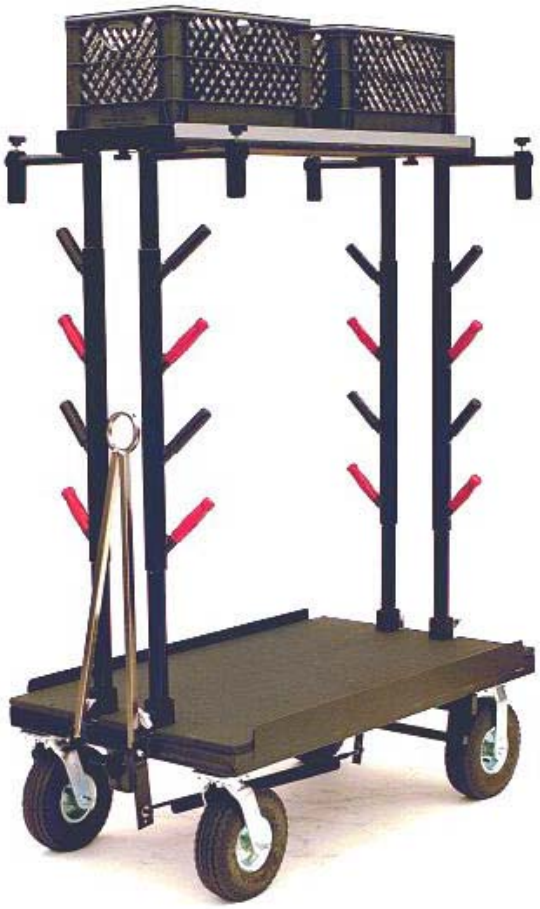

NOTE: Milk Crates not included

Features:
- Holds (8) Pieces ofTrack and 4' x 8' Plywood
- Plywood Holders (Adjustable)
- Detachable Top Shelf Holds (2) Milk Crates
- Base Holds (3) Milk Crates
- Jockey Box Holds (2) Half Milk Crates
- Vertical Posts and Top Shelf are Removable forTransportation
- Wheels (2) 10" Swivel Casters & (2) 10" Rigid Casters (Optional (2) 10" Swivel Casters & (4) 10" Rigid Casters)
- Foot Brake
- Pull Bar

Accessories:

Options:
- Foam Filled Tires **(WA-10 FOAM CTR)** $ 196.00
- Milk Crate **(B-03)** $ 20.00
- Full Milk Crate Liner **(B-04)** $ 12.50

Replacement parts:
- 10" Pneumatic Tire **(WA-10 TIRE)** $ 23.00
- 10" Pneumatic Tube **(WA-10 TUBE)** $ 8.75
- 10" Pneumatic Rigid Caster Wheel **(W-10 RCX)** $ 59.50
- 10" Pneumatic Swivel Caster Wheel **(W-10 SCX)** $ 65.00

Shipping Dimensions: L56" x W30" x H22" (245 lbs.) w/Pallet
L142.2cm x W76.2cm x H55.9cm (111.4 kgs.) w/Pallet

Ditty Cart

Part No. SB-02

NOTE: Milk Crates not included

Sale Price: $ 1,020.00
Material: Steel
Color: Black Hammertone
Max. Capacity: 700 lbs. / 318 kgs.
Weight: 119 lbs. / 54 kgs.
Dimensions: L28 1/2" x W23" x H43"
L72.4cm x W58.4cm x H109.2cm

Features:
- (3) Ditty Drawers (D17” x W13” x H3”) (D43.2cm x W33cm x H7.6cm)
- (2) Sliding Milk Crate Compartments
- Top Pan Holds (1) Milk Crate (L18 1/2” x W12 1/4”) (L47cm x W31.1cm)
- (2) Side Gel Racks (Accommodates 14 Gels)
- Wheels (2) 5” Thermal Swivel Casters with Brake & (2) 10” Pneumatic Offset Wheels
- Locking Bar

Accessories:
- Pull-out Work Board D17” x W13” x H3/4” (D43.2cm x W33cm x H1.9cm) **(DRAWER-500)** $ 49.00

Options:
- Milk Crate **(B-03)** $ 20.00
- Half Milk Crate **(B-05)** $ 20.00
- Full Milk Crate Liner **(B-04)** $ 12.50
- Half Milk Crate Liner **(B-06)** $ 12.00
- Foam Filled Tires **(WA-10 FOAM OS)** $ 98.00

Replacement parts:
- Ditty Drawer **(DRAWER-02)** $ 92.00
- 5" Thermal Swivel Caster with Brake **(W-05 SCBRX)** $ 23.00
- 10” Pneumatic Tire **(WA-10 TIRE)** $ 23.00
- 10” Pneumatic Tube **(WA-10 TUBE)** $ 8.75
- 10” Pneumatic Offset Wheel **(W-10 OS34X)** $ 47.50
- 3/4” Sealed Bearing **(WA-34 BR)** $ 2.75 (Need (2) per Wheel)

Shipping Dimensions: L31” x W24” x H45” (125 lbs.)
L78.7cm x W61cm x H114.3cm (56.8 kgs.)

Backstage Equipment, Inc. Toll Free (800) 692-2787 • Tel (818) 504-6026 • Fax (818) 504-6180 • info@backstageweb.com • www.backstageweb.com

4-Crate Vertical Set Box Cart

Part No. SB-04V

Sale Price: $ 1,540.00
Material: Steel
Color: Black Hammertone
Max. Capacity: 800 lbs. / 364 kgs.
Weight: 162 lbs. / 73.6 kgs.
Dimensions: L38 1/8" x W20 7/8" x H48 3/8"
L96.8cm x W53cm x H122.9cm

NOTE: Milk Crates not included

Features:
- (3) Full Size Set Box Drawer (D17" x W27 1/4" x H3") (D43.2cm x W69.2cm x H7.6cm)
- (4) Sliding Milk Crate Compartments
- Top Pan Holds (2) Milk Crate (L27 3/4" x W18") (L70.5cm x W45.7cm)
- (2) Side Gel Racks (Accommodates 12 Gels)
- Wheels (2) 8" Swivel Casters with Brake & (2) 8" Rigid Casters
- Locking Bar

Accessories:
- Pull-out Work Board D19" x W27 1/4" x H3/4" (D48.3cm x W69.2cm x H1.9cm) **(DRAWER-501 B)** $ 81.00

Options:
- Milk Crate **(B-03)** $ 20.00
- Half Milk Crate **(B-05)** $ 20.00
- Full Milk Crate Liner **(B-04)** $ 12.50
- Half Milk Crate Liner **(B-06)** $ 12.00
- Foam Filled Tires **(WA-08 FOAM CTR)** $ 172.00

Replacement parts:
- Full Size Set Box Drawer **(DRAWER-01)** $ 103.00
- 8" Pneumatic Tire **(WA-08 TIRE)** $ 18.00
- 8" Pneumatic Tube **(WA-08 TUBE)** $ 8.00
- 8" Pneumatic Swivel Caster Wheel with Brake **(W-08 SCBRX)** $ 53.50
- 8" Pneumatic Rigid Caster Wheel **(W-08 RCX)** $ 48.00

Shipping Dimensions: L39" x W21" x H49" (175 lbs.)
L99.1cm x W53.3cm x H124.5cm (79.6 kgs.)

4-Crate Horizontal Set Box Cart

Part No. SB-04H

Sale Price: $ 1,865.00
Material: Steel
Color: Black Hammertone
Max. Capacity: 1,000 lbs. / 454 kgs.
Weight: 200 lbs. / 90.9 kgs.
Dimensions: L48" x W20" x H45"
L121.9cm x W50.8cm x H114.3cm

Features:
- (3) Full Size Set Box Drawer (D17” x W27 1/4” x H3”) (D43.2cm x W69.2cm x H7.6cm)
- (4) Sliding Milk Crate Compartments
- Top Pan Holds (3) Milk Crate (L42” x W18”) (L106.7cm x W45.7cm)
- Jockey Box Holds (1) Half Milk Crate
- Wheels (2) 10” Swivel Casters & (2) 10” Rigid Casters
- Foot Brake
- Locking Bars (2)
- Pull Bar

Accessories:
- Pull-out Work Board D19” x W27 1/4” x H3/4” (D48.3cm x W69.2cm x H1.9cm) **(DRAWER-501 B)** $ 81.00
- Gel Holder (Single) **(GEL SB-S)** $ 232.00
- Gel Holder (Double) **(GEL SB-D)** $ 265.00

NOTE: Milk Crates not included

Options:
- Milk Crate **(B-03)** $ 20.00
- Half Milk Crate **(B-05)** $ 20.00
- Full Milk Crate Liner **(B-04)** $ 12.50
- Half Milk Crate Liner **(B-06)** $ 12.00
- Foam Filled Tires **(WA-10 FOAM CTR)** $ 196.00

Replacement parts:
- Full Size Set Box Drawer **(DRAWER-01)** $ 103.00
- 10” Pneumatic Tire **(WA-10 TIRE)** $ 23.00
- 10” Pneumatic Tube **(WA-10 TUBE)** $ 8.75
- 10” Pneumatic Rigid Caster Wheel **(W-10 RCX)** $ 59.50
- 10” Pneumatic Swivel Caster Wheel **(W-10 SCX)** $ 65.00

Shipping Dimensions: L49” x W21” x H46” (205 lbs.)
L124.5cm x W53.3cm x H116.8cm (93.2 kgs.)

Backstage Equipment, Inc. Toll Free (800) 692-2787 • Tel (818) 504-6026 • Fax (818) 504-6180 • info@backstageweb.com • www.backstageweb.com

6-Crate Vertical Set Box Cart

Part No. SB-06V

New

Sale Price: $ 1,375.00
Material: Steel
Color: Black Hammertone
Max. Capacity: 800 lbs. / 364 kgs.
Weight: 133 lbs. / 60.5 kgs.
Dimensions: L38 1/8" x W20 7/8" x H48 3/8"
L96.8cm x W53cm x H122.9cm

Features:
- (6) Sliding Milk Crate Compartments
- Top Pan Holds (3) Milk Crate L42" x W18" (L106.7cm x W45.7cm)
- Wheels (2) 8" Swivel Casters with Brakes & (2) 8" Rigid Casters
- Locking Bar
- Pull Bar

Accessories:
- Gel Holder (Single) **(GEL SB-S)** $ 232.00
- Gel Holder (Double) **(GEL SB-D)** $ 265.00

Options:
- Milk Crate **(B-03)** $ 20.00
- Full Milk Crate Liner **(B-04)** $ 12.50
- Foam Filled Tires **(WA-08 FOAM CTR)** $ 172.00

Replacement parts:
- 8" Pneumatic Tire **(WA-08 TIRE)** $ 18.00
- 8" Pneumatic Tube **(WA-08 TUBE)** $ 8.00
- 8" Pneumatic Swivel Caster Wheel with Brake **(W-08 SCBRX)** $ 53.50
- 8" Pneumatic Rigid Caster Wheel **(W-08 RCX)** $ 48.00

NOTE: Milk Crates not included

Shipping Dimensions: L39" x W21" x H49" (145 lbs.)
L99.1cm x W53.3cm x H124.5cm (65.9 kgs.)

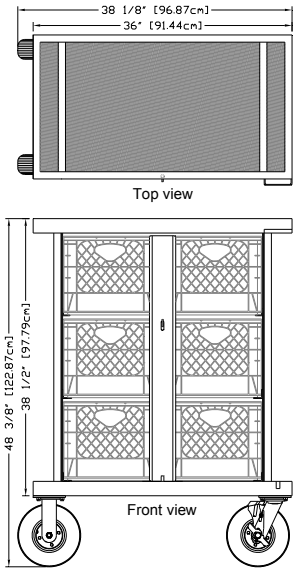

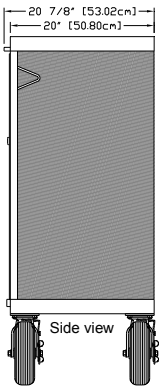

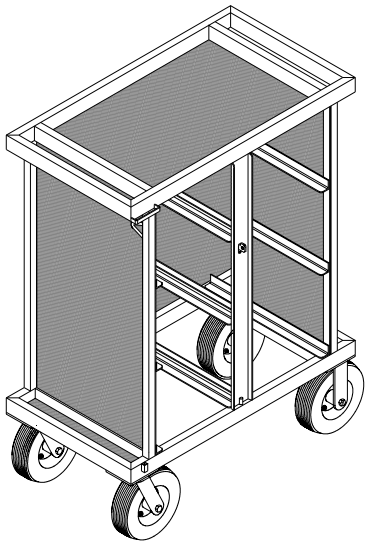

6-Crate Horizontal Set Box Cart

Part No. SB-06H

Sale Price: $ 1,700.00
Material: Steel
Color: Black Hammertone
Max. Capacity: 1,000 lbs. / 454 kgs.
Weight: 163 lbs. / 74.1 kgs.
Dimensions: L48" x W20" x H45"
L121.9cm x W50.8cm x H114.3cm

Features:
- (6) Sliding Milk Crate Compartments
- Top Pan Holds (3) Milk Crate (L42” x W18”) (L106.7cm x W45.7cm)
- Jockey Box Holds (1) Half Milk Crate
- Wheels (2) 10” Swivel Casters & (2) 10” Rigid Casters
- Foot Brake
- Locking Bars (2)
- Pull Bar

Accessories:
- Gel Holder (Single) **(GEL SB-S)** $ 232.00
- Gel Holder (Double) **(GEL SB-D)** $ 265.00

Options:
- Milk Crate **(B-03)** $ 20.00
- Half Milk Crate **(B-05)** $ 20.00
- Full Milk Crate Liner **(B-04)** $ 12.50
- Half Milk Crate Liner **(B-06)** $ 12.00
- Foam Filled Tires **(WA-10 FOAM CTR)** $ 196.00

Replacement parts:
- 10” Pneumatic Tire **(WA-10 TIRE)** $ 23.00
- 10” Pneumatic Tube **(WA-10 TUBE)** $ 8.75
- 10” Pneumatic Rigid Caster Wheel **(W-10 RCX)** $ 59.50
- 10” Pneumatic Swivel Caster Wheel **(W-10 SCX)** $ 65.00

Shipping Dimensions: L49” x W21” x H46” (172 lbs.)
L124.5cm x W53.3cm x H116.8cm (78.2 kgs.)

NOTE: Milk Crates not included

Backstage Equipment, Inc. Toll Free (800) 692-2787 • Tel (818) 504-6026 • Fax (818) 504-6180 • info@backstageweb.com • www.backstageweb.com

7-Crate Set Box Cart

Part No. SB-07

NOTE: Milk Crates not included

Sale Price: $ 1,995.00
Material: Steel
Color: Black Hammertone
Max. Capacity: 1,000 lbs. / 454 kgs.
Weight: 236 lbs. / 107.3 kgs.
Dimensions: L47 1/8" x W26" x H57 1/4"
L119.7cm x W66cm x H145.5cm

Features:
- (3) Full Size Set Box Drawer (D17” x W27 1/4” x H3”) (D43.2cm x W69.2cm x H7.6cm)
- (7) Sliding Milk Crate Compartments
- Top Pan Holds (3) Milk Crate (L42” x W18”) (L106.7cm x W45.7cm)
- Rear Storage Area (L42” x W5”) (L139.7cm x W12.7cm)
- Wheels (2) 10” Swivel Casters & (2) 10” Rigid Casters
- Jockey Box Holds (1) Half Milk Crate
- Locking Bars (2)
- Pull Bar
- Foot Brake

Accessories:
- Rear Fold-Down Table **(TB-42)** $ 265.00
- Pull-out Work Board D19” x W27 1/4” x H3/4” (D48.3cm x W69.2cm x H1.9cm) **(DRAWER-501 B)** $ 81.00

Options:
- Milk Crate **(B-03)** $ 20.00
- Half Milk Crate **(B-05)** $ 20.00
- Full Milk Crate Liner **(B-04)** $ 12.50
- Half Milk Crate Liner **(B-06)** $ 12.00
- Foam Filled Tires **(WA-10 FOAM CTR)** $ 196.00
- Additional (2) 10” Pneumatic Rigid Caster Wheel **(W-10 RCX)** $ 119.00
- Additional (2) 10” Foam Filled Tires **(WA-10 FOAM CTR)** $ 98.00

Replacement parts:
- Full Size Set Box Drawer **(DRAWER-01)** $ 103.00
- 10” Pneumatic Tire **(WA-10 TIRE)** $ 23.00
- 10” Pneumatic Tube **(WA-10 TUBE)** $ 8.75
- 10” Pneumatic Rigid Caster Wheel **(W-10 RCX)** $ 59.50
- 10” Pneumatic Swivel Caster Wheel **(W-10 SCX)** $ 65.00

Shipping Dimensions: L49” x W27” x H58” (255 lbs.)
L124.5cm x W69cm x H147.3cm (115.9 kgs.)

9-Crate Set Box Cart

Part No. SB-09

Sale Price: $ 1,775.00
Material: Steel
Color: Black Hammertone
Max. Capacity: 1,000 lbs. / 454 kgs.
Weight: 214 lbs. / 97.3 kgs.
Dimensions: L47 1/8" x W26" x H57 1/4"
L119.7cm x W66cm x H145.5cm

NOTE: Milk Crates not included

Features:
- (9) Sliding Milk Crate Compartments
- Top Pan Holds (3) Milk Crate (L42" x W18") (L106.7cm x W45.7cm)
- Rear Storage Area (L42" x W5") (L139.7cm x W12.7cm)
- Wheels (2) 10" Swivel Casters & (2) 10" Rigid Casters
- Jockey Box Holds (1) Half Milk Crate
- Locking Bars (2)
- Pull Bar
- Foot Brake

Accessories:
- Rear Fold-Down Table **(TB-42)** $ 265.00

Options:
- Milk Crate **(B-03)** $ 20.00
- Half Milk Crate **(B-05)** $ 20.00
- Full Milk Crate Liner **(B-04)** $ 12.50
- Half Milk Crate Liner **(B-06)** $ 12.00
- Foam Filled Tires **(WA-10 FOAM CTR)** $ 196.00
- Additional (2) 10" Pneumatic Rigid Caster Wheel **(W-10 RCX)** $ 119.00
- Additional (2) 10" Foam Filled Tires **(WA-10 FOAM CTR)** $ 98.00

Replacement parts:
- 10" Pneumatic Tire **(WA-10 TIRE)** $ 23.00
- 10" Pneumatic Tube **(WA-10 TUBE)** $ 8.00
- 10" Pneumatic Rigid Caster Wheel **(W-10 RCX)** $ 59.50
- 10" Pneumatic Swivel Caster Wheel **(W-10 SCX)** $ 65.00

Shipping Dimensions: L49" x W27" x H58" (221 lbs.)
L124.5cm x W69cm x H147.3cm (100.5 kgs.)

Backstage Equipment, Inc. Toll Free (800) 692-2787 • Tel (818) 504-6026 • Fax (818) 504-6180 • info@backstageweb.com • www.backstageweb.com

8-Crate Set Box Platinum Cart

Part No. SB-08 PS

Sale Price: $ 2,645.00
Material: Steel
Color: Black Hammertone
Max. Capacity: 1,000 lbs. / 454 kgs.
Weight: 385 lbs. / 175 kgs.
Dimensions: L63 1/8" x W28" x H57 1/4"
L160.3cm x W71.1cm x H145.4cm

NOTE: Milk Crates not included

Features:
- (4) Small Birch Wood Drawers (D19 1/2" x W26 1/2" x H5 1/4") (D49.5cm x W67.3cm x H13.4cm)
- (1) Large Birch Wood Drawer (D19 1/2" x W26 1/2" x H10 3/4") (D49.5cm x W67.3cm x H27.3cm)
- Pull-Out Work Board (D19 1/2" x W26 1/2") (D49.5cm x W67.3cm)
- Rear Fold-Down Table (L56" x W24") (L142.2cm x W61cm)
- (3) Sliding Milk Crate Compartments
- (5) Sliding Half Milk Crate Compartments
- Top Pan Holds (4) Milk Crates (L56" x W18") (L142.2cm x W45.7cm)
- Jockey Box Holds (2) Half Milk Crates
- Wheels (2) 10" Swivel Casters & (2) 10" Rigid Casters (Optional (2) 10" Swivel Casters & (4) 10" Rigid Casters)
- Foot Brake
- Pull Bar
- (2) Locking Bars

Accessories:

Options:
- Milk Crate **(B-03)** $ 20.00
- Half Milk Crate **(B-05)** $ 20.00
- Full Milk Crate Liner **(B-04)** $ 12.50
- Half Milk Crate Liner **(B-06)** $ 12.00
- Foam Filled Tires **(WA-10 FOAM CTR)** $ 196.00
- Additional (2) 10" Pneumatic Rigid Caster Wheel **(W-10 RCX)** $ 119.00
- Additional (2) 10" Foam Filled Tires **(WA-10 FOAM CTR)** $ 98.00

Replacement parts:
- Small Birch Wood Drawer **(DRAWER-502)** $ 123.00
- Large Birch Wood Drawer **(DRAWER-503)** $ 150.00
- Pull-Out Work Board **(DRAWER-501 A)** $ 76.00
- 10" Pneumatic Tire **(WA-10 TIRE)** $ 23.00
- 10" Pneumatic Tube **(WA-10 TUBE)** $ 8.75
- 10" Pneumatic Rigid Caster Wheel **(W-10 RCX)** $ 59.50
- 10" Pneumatic Swivel Caster Wheel **(W-10 SCX)** $ 65.00

Shipping Dimensions: L64" x W29" x H58" (400 lbs.)
L162.6cm x W73.7cm x H147.3cm (181.8 kgs.)

Wood Work Box Cart

Part No. SB-01

Sale Price: $ 1,775.00
Material: Steel
Color: Black Hammertone
Max. Capacity: 800 lbs. / 364 kgs.
Weight: 180 lbs. / 81.8 kgs.
Dimensions: L38 1/8" x W20 7/8" x H48 3/8"
L96.8cm x W53cm x H122.9cm

Features:
- (2) Small Birch Wood Drawers (D19 1/2” x W26 1/2” x H5 1/4”) (D49.5cm x W67.3cm x H13.4cm)
- (2) Large Birch Wood Drawers (D19 1/2” x W26 1/2” x H10 3/4”) (D49.5cm x W67.3cm x H27.3cm)
- Pull-Out Work Board (D19 1/2” x W26 1/2”) (D49.5cm x W67.3cm)
- Top Pan Holds (2) Milk Crates (L27 3/4” x W18”) (L70.5cm x W45.7cm)
- (2) Side Gel Racks (Accommodates 12 Gels)
- Wheels (2) 8” Swivel Casters with Brake & (2) 8” Rigid Casters
- Locking Bar

Accessories:

Options:
- Milk Crate **(B-03)** $ 20.00
- Half Milk Crate **(B-05)** $ 20.00
- Full Milk Crate Liner **(B-04)** $ 12.50
- Half Milk Crate Liner **(B-06)** $ 12.00
- Foam Filled Tires **(WA-08 FOAM CTR)** $ 172.00

NOTE: Milk Crates not included

Replacement parts:
- Small Birch Wood Drawer **(DRAWER-502)** $ 123.00
- Large Birch Wood Drawer **(DRAWER-503)** $ 150.00
- Pull-Out Work Board **(DRAWER-501 A)** $ 76.00
- 8” Pneumatic Tire **(WA-08 TIRE)** $ 18.00
- 8” Pneumatic Tube **(WA-08 TUBE)** $ 8.00
- 8” Pneumatic Swivel Caster Wheel **(W-08 SCBRX)** $ 53.50
- 8” Pneumatic Rigid Caster Wheel **(W-08 RCX)** $ 48.00

Shipping Dimensions: L40” x W22” x H49” (206 lbs.)
L101.6cm x W55.9cm x H124.5cm (93.6 kgs.)

Backstage Equipment, Inc. Toll Free (800) 692-2787 • Tel (818) 504-6026 • Fax (818) 504-6180 • info@backstageweb.com • www.backstageweb.com

Prop Cart

Part No. P-01

Sale Price: $ 2,295.00
Material: Steel
Color: Black Hammertone
Max. Capacity: 1,000 lbs. / 454 kgs.
Weight: 290 lbs. / 131.8 kgs.
Dimensions: L60" x W28" x H54"
L152.4cm x W71.1cm x H137.2cm

Features:
- (2) Small Birch Wood Drawers (D19 1/2” x W26 1/2” x H5 1/4”) (D49.5cm x W67.3cm x H13.4cm)
- (2) Large Birch Wood Drawers (D19 1/2” x W26 1/2” x H10 3/4”) (D49.5cm x W67.3cm x H27.3cm)
- Pull-Out Work Board (D19 1/2” x W26 1/2”) (D49.5cm x W67.3cm)
- (2) Pull-Out Chair Holders (Hold up to six chairs)
- Top Storage Pan Holds (2) Milk Crates (L27” x W18”) (L68.6cm x W45.7cm)
- Rear Storage Area (L54” x W7”) (L137.2cm x W17.8cm)
- (2) End Pans Holds (1) Milk Crate each (L18” x W13”) (L45.7cm x W33cm)
- Jockey Box Holds (2) Half Milk Crates
- Wheels (2) 10” Swivel Casters & (2) 10” Rigid Casters
- Foot Brake
- Pull Bar
- Locking Bar

NOTE: Milk Crates not included

Accessories:

Options:
- Milk Crate **(B-03)** $ 20.00
- Half Milk Crate **(B-05)** $ 20.00
- Full Milk Crate Liner **(B-04)** $ 12.50
- Half Milk Crate Liner **(B-06)** $ 12.00
- Foam Filled Tires **(WA-10 FOAM CTR)** $ 196.00
- Additional (2) 10” Pneumatic Rigid Caster Wheel **(W-10 RCX)** $ 119.00
- Additional (2) 10” Foam Filled Tires **(WA-10 FOAM CTR)** $ 98.00

Replacement parts:
- Small Birch Wood Drawer **(DRAWER-502)** $ 123.00
- Large Birch Wood Drawer **(DRAWER-503)** $ 150.00
- Pull-Out Work Board **(DRAWER-501 A)** $ 76.00
- 10” Pneumatic Tire **(WA-10 TIRE)** $ 23.00
- 10” Pneumatic Tube **(WA-10 TUBE)** $ 8.75
- 10” Pneumatic Rigid Caster Wheel **(W-10 RCX)** $ 59.50
- 10” Pneumatic Swivel Caster Wheel **(W-10 SCX)** $ 65.00

Shipping Dimensions: L60" x W29" x H55" (300 lbs.)
L152.4cm x W73.7cm x H139.7cm (136.4 kgs.)

Prop & Ammo Cart

Part No. P-02

NOTE: Milk Crates not included

Sale Price: $ 2,510.00
Material: Steel
Color: Black Hammertone
Max. Capacity: 1,000 lbs. / 454 kgs.
Weight: 367 lbs. / 166.8 kgs.
Dimensions: L60" x W28" x H66"
L152.4cm x W71.1cm x H167.6cm

Features:
- (2) Small Birch Wood Drawers (D19 1/2” x W26 1/2” x H5 1/4”) (D49.5cm x W67.3cm x H13.4cm)
- (2) Large Birch Wood Drawers (D19 1/2” x W26 1/2” x H10 3/4”) (D49.5cm x W67.3cm x H27.3cm)
- Pull-Out Work Board (D19 1/2” x W26 1/2”) (D49.5cm x W67.3cm)
- (1) Pull-Out Chair Holders (Hold up to (3) chairs)
- Top Storage Pan Holds (2) Milk Crates (L27” x W18”) (L68.6cm x W45.7cm)
- Rear Storage Area (L54” x W7”) (L137.2cm x W17.8cm)
- End Pan Holds (1) Milk Crate (L18” x W13 3/4”) (L45.7cm x W35cm)
- Jockey Box holds (2) Half Milk Crates
- Lockable Ammunitions Case (D20” x W13 1/2” x H60”) (D50.8cm x W34.3cm x H152.4cm)
- Wheels (2) 10” Swivel Casters & (2) 10” Rigid Casters (Optional (2) 10” Swivel Casters & (4) 10” Rigid Casters)
- Foot Brake
- Pull Bar
- Locking Bar

Accessories:

Options:
- Milk Crate **(B-03)** $ 20.00
- Half Milk Crate **(B-05)** $ 20.00
- Full Milk Crate Liner **(B-04)** $ 12.50
- Half Milk Crate Liner **(B-06)** $ 12.00
- Foam Filled Tires **(WA-10 FOAM CTR)** $ 196.00
- Additional (2) 10” Pneumatic Rigid Caster Wheel **(W-10 RCX)** $ 119.00
- Additional (2) 10” Foam Filled Tires **(WA-10 FOAM CTR)** $ 98.00

Replacement parts:
- Small Birch Wood Drawer **(DRAWER-502)** $ 123.00
- Large Birch Wood Drawer **(DRAWER-503)** $ 150.00
- Pull-Out Work Board **(DRAWER-501 A)** $ 76.00
- 10” Pneumatic Tire **(WA-10 TIRE)** $ 23.00
- 10” Pneumatic Tube **(WA-10 TUBE)** $ 8.75
- 10” Pneumatic Rigid Caster Wheel **(W-10 RCX)** $ 59.50
- 10” Pneumatic Swivel Caster Wheel **(W-10 SCX)** $ 65.00

Shipping Dimensions: L60" x W29" x H67" (387 lbs.)
L152.4cm x W73.7cm x H170.2cm (175.9 kgs.)

Backstage Equipment, Inc. Toll Free (800) 692-2787 • Tel (818) 504-6026 • Fax (818) 504-6180 • info@backstageweb.com • www.backstageweb.com

Prop & Crate Cart

Part No. P-03

NOTE: Milk Crates not included

Sale Price: $ 2,400.00
Material: Steel
Color: Black Hammertone
Max. Capacity: 1,000 lbs. / 454 kgs.
Weight: 307 lbs. / 139.6 kgs.
Dimensions: L60" x W28" x H54"
L152.4cm x W71.1cm x H137.2cm

Features:
- (2) Small Birch Wood Drawers (D19 1/2” x W26 1/2” x H5 1/4”) (D49.5cm x W67.3cm x H13.4cm)
- (2) Large Birch Wood Drawers (D19 1/2” x W26 1/2” x H10 3/4”) (D49.5cm x W67.3cm x H27.3cm)
- Pull-Out Work Board (D19 1/2” x W26 1/2”) (D49.5cm x W67.3cm)
- (1) Pull-Out Chair Holder (Hold up to (3) chairs)
- (3) Sliding Milk Crate Compartments
- Top Storage Pan Holds (3) Milk Crates (L41” x W18”) (L104.1cm x W45.7cm)
- Rear Storage Area (L54” x W7”) (L137.2cm x W17.8cm)
- End Pan Holds (1) Milk Crate (L13” x W18”) (L33cm x W45.7cm)
- Jockey Box holds (2) Half Milk Crates
- Wheels (2) 10” Swivel Casters & (2) 10” Rigid Casters (Optional (2) 10” Swivel Casters & (4) 10” Rigid Casters)
- Foot Brake
- Pull Bar
- (2) Locking Bars

Accessories:

Options:
- Milk Crate **(B-03)** $ 20.00
- Half Milk Crate **(B-05)** $ 20.00
- Full Milk Crate Liner **(B-04)** $ 12.50
- Half Milk Crate Liner **(B-06)** $ 12.00
- Foam Filled Tires **(WA-10 FOAM CTR)** $ 196.00
- Additional (2) 10” Pneumatic Rigid Caster Wheel **(W-10 RCX)** $ 119.00
- Additional (2) 10” Foam Filled Tires **(WA-10 FOAM CTR)** $ 98.00

Replacement parts:
- Small Birch Wood Drawer **(DRAWER-502)** $ 123.00
- Large Birch Wood Drawer **(DRAWER-503)** $ 150.00
- Pull-Out Work Board **(DRAWER-501 A)** $ 76.00
- 10” Pneumatic Tire **(WA-10 TIRE)** $ 23.00
- 10” Pneumatic Tube **(WA-10 TUBE)** $ 8.75
- 10” Pneumatic Rigid Caster Wheel **(W-10 RCX)** $ 59.50
- 10” Pneumatic Swivel Caster Wheel **(W-10 SCX)** $ 65.00

Shipping Dimensions: L60" x W29" x H55" (325 lbs.)
L152.4cm x W73.7cm x H139.7cm (147.7 kgs.)

Large Prop Cart

Part No. P-04

NOTE: Milk Crates not included

Sale Price: $ 2,645.00
Material: Steel
Color: Black Hammertone
Max. Capacity: 1,000 lbs. / 454 kgs.
Weight: 358 lbs. / 162.7 kgs.
Dimensions: L61" x W28" x H57 1/2"
L154.9cm x W71.1cm x H146.1cm

Features:
- (1) Wide Top Birch Wood Drawer (D19 1/2” x W54 1/4” x H5 1/4”) (D49.5cm x W137.8cm x H13.4cm)
- (2) Small Birch Wood Drawers (D19 1/2” x W26 1/2” x H5 1/4”) (D49.5cm x W67.3cm x H13.4cm)
- (4) Large Birch Wood Drawers (D19 1/2” x W26 1/2” x H10 3/4”) (D49.5cm x W67.3cm x H27.3cm)
- (2) Pull-Out Work Boards (D19 1/2” x W26 1/2”) (D49.5cm x W67.3cm)
- Top Storage Pan Holds (4) Milk Crates (L55” x W18”) (L139.7cm x W45.7cm)
- Rear Storage Area (L55” x W5”) (L139.7cm x W12.7cm)
- Jockey Box Holds (2) Half Milk Crates
- Wheels (2) 10” Swivel Casters & (2) 10” Rigid Casters (Optional (2) 10” Swivel Casters & (4) 10” Rigid Casters)
- Foot Brake
- Pull Bar
- Locking Bar

Accessories:

Options:
- Rear Fold-Down Table **(TB-54)** $ 286.00
- Milk Crate **(B-03)** $ 20.00
- Half Milk Crate **(B-05)** $ 20.00
- Full Milk Crate Liner **(B-04)** $ 12.50
- Half Milk Crate Liner **(B-06)** $ 12.00
- Foam Filled Tires **(WA-10 FOAM CTR)** $ 196.00
- Additional (2) 10” Pneumatic Rigid Caster Wheel **(W-10 RCX)** $ 119.00
- Additional (2) 10” Foam Filled Tires **(WA-10 FOAM CTR)** $ 98.00

Replacement parts:
- Small Birch Wood Drawer **(DRAWER-502)** $ 123.00
- Large Birch Wood Drawer **(DRAWER-503)** $ 150.00
- Pull-Out Work Board **(DRAWER-501 A)** $ 76.00
- 10” Pneumatic Tire **(WA-10 TIRE)** $ 23.00
- 10” Pneumatic Tube **(WA-10 TUBE)** $ 8.75
- 10” Pneumatic Rigid Caster Wheel **(W-10 RCX)** $ 59.50
- 10” Pneumatic Swivel Caster Wheel **(W-10 SCX)** $ 65.00

Shipping Dimensions: L60" x W29" x H58" (375 lbs.)
L152.4cm x W73.7cm x H147.3cm (170.5 kgs.)

Backstage Equipment, Inc. Toll Free (800) 692-2787 • Tel (818) 504-6026 • Fax (818) 504-6180 • info@backstageweb.com • www.backstageweb.com

Prop-Chair Cart

Part No. P-07

NOTE: Milk Crates not included

Sale Price: $ 1,700.00
Material: Steel
Color: Black Hammertone
Max. Capacity: 1,000 lbs. / 454 kgs.
Weight: 205 lbs. / 93.2 kgs.
Dimensions: L60" x W28" x H58 1/2"
L152.4cm x W71.1cm x H148.6cm

Features:
- Inside Area Holds (12) Director's Chairs (L47 3/4" x W22" x H38") (L121.3cm x W55.9cm x H96.5cm)
- (2) Pull-Out Chair Holders (Hold (6) Director's Chairs)
- Top Storage Pan Holds (3) Milk Crates (L45 3/4" x W20") (L116.2cm x W50.8cm)
- Rear Table Storage Area (L56" x W6") (L142.2cm x W15.2cm)
- Jockey Box holds (2) Half Milk Crates
- Wheels (2) 10" Swivel Casters & (2) 10" Rigid Casters (Optional (2) 10" Swivel Casters & (4) 10" Rigid Casters)
- Foot Brake

Accessories:

Options:
- Milk Crate **(B-03)** $ 20.00
- Half Milk Crate **(B-05)** $ 20.00
- Full Milk Crate Liner **(B-04)** $ 12.50
- Half Milk Crate Liner **(B-06)** $ 12.00
- Foam Filled Tires **(WA-10 FOAM CTR)** $ 196.00
- Additional (2) 10" Pneumatic Rigid Caster Wheel **(W-10 RCX)** $ 119.00
- Additional (2) 10" Foam Filled Tires **(WA-10 FOAM CTR)** $ 98.00

Replacement parts:
- 10" Pneumatic Tire **(WA-10 TIRE)** $ 23.00
- 10" Pneumatic Tube **(WA-10 TUBE)** $ 8.75
- 10" Pneumatic Rigid Caster Wheel **(W-10 RCX)** $ 59.50
- 10" Pneumatic Swivel Caster Wheel **(W-10 SCX)** $ 65.00

Shipping Dimensions: L60" x W29" x H59" (215 lbs.)
L152.4cm x W73.7cm x H149.9cm (97.7 kgs.)

Craft-Service Cart

Part No. CS-01

NOTE: Milk Crates not included

Sale Price: $ 1,925.00
Material: Steel
Color: Black Hammertone
Max. Capacity: 1,000 lbs. / 454 kgs.
Weight: 295 lbs. / 134.1 kgs.
Dimensions: L60 1/2" x W28" x H51 1/4"
L153.7cm x W71.1cm x H130.2cm

Features:
- (2) Small Birch Wood Drawers (D19 1/2” x W26 1/2” x H5 1/4”) (D49.5cm x W67.3cm x H13.4cm)
- (2) Large Birch Wood Drawers (D19 1/2” x W26 1/2” x H10 3/4”) (D49.5cm x W67.3cm x H27.3cm)
- Top Work Shelf (D20” x W50” x H17 1/2”) (L50.8cm x W127cm x H44.5cm
- Rear Storage Area (L56” x W5” x H28”) (L142.2cm x W12.7cm x H71.1cm
- End Pan Holds (1) Milk Crate (L13” x W18”) (L33cm x W45.7cm)
- Umbrella Holder
- Jockey Box Holds (2) Half Milk Crates
- Wheels (2) 10” Swivel Casters & (2) 10” Rigid Casters (Optional (2) 10” Swivel Casters & (4) 10” Rigid Casters)
- Foot Brake
- Pull Bar
- Locking Bar

Accessories:
- Water Cooler Bracket **(CS-01 WCB)** $ 195.00

Options:
- Half Milk Crate**(B-05)** $ 20.00
- Half Milk Crate Liner **(B-06)** $ 12.00
- Foam Filled Tires **(WA-10 FOAM CTR)** $ 196.00
- Additional (2) 10” Pneumatic Rigid Caster Wheel **(W-10 RCX)** $ 119.00
- Additional (2) 10” Foam Filled Tires **(WA-10 FOAM CTR)** $ 98.00

Replacement parts:
- Small Birch Wood Drawer **(DRAWER-502)** $ 123.00
- Large Birch Wood Drawer **(DRAWER-503)** $ 150.00
- 10” Pneumatic Tire **(WA-10 TIRE)** $ 23.00
- 10” Pneumatic Tube **(WA-10 TUBE)** $ 8.75
- 10” Pneumatic Rigid Caster Wheel **(W-10 RCX)** $ 59.50
- 10” Pneumatic Swivel Caster Wheel **(W-10 SCX)** $ 65.00

Shipping Dimensions: L61" x W29" x H52" (315 lbs.)
L155cm x W73.7cm x H132.1cm (143.2 kgs.)

Backstage Equipment, Inc. Toll Free (800) 692-2787 • Tel (818) 504-6026 • Fax (818) 504-6180 • info@backstageweb.com • www.backstageweb.com

Craft-Service Cabana Caddie

Part No. CS-02

Sale Price: $ 1,020.00
Material: Steel
Color: Black Hammertone
Max. Capacity: 800 lbs. / 364 kgs.
Weight: 142 lbs. / 64.6 kgs.
Dimensions: L49 1/4" x W25 1/4" x H59"
L125.1cm x W64.1cm x H149.9cm

Features:
• Top Work Tray (L35 1/2” x W19 1/2”) (L90.2cm x W49.5cm)
• Sliding Drawer (L34 1/2” x W19 1/2” x H6”) (L87.6cm x W49.5cm x H15.2cm)
• Ice ChestArea (L35 1/2” x W19 1/2” x H26 1/2”) (L90.2cm x W49.5cm x H67.3cm)
• Trash Bag Bracket
• Umbrella Holder
• Wheels (2) 8” Swivel Casters with Brake & (2) 8” Rigid Casters

Accessories:

Options:
• Foam Filled Tires **(WA-08 FOAM CTR)** $ 172.00

Replacement parts:
• 8” Pneumatic Tire **(WA-08 TIRE)** $ 18.00
• 8” Pneumatic Tube **(WA-08 TUBE)** $ 8.00
• 8” Pneumatic Swivel Caster Wheel **(W-08 SCBRX)** $ 53.50
• 8” Pneumatic Rigid Caster Wheel **(W-08 RCX)** $ 48.00

Shipping Dimensions: L50" x W26" x H60" (155 lbs.)
L127cm x W66cm x H152.4cm (70.5 kgs.)

Monitor Mover Cart

Part No. V-02 TR

Sale Price: $ 730.00
Material: Steel
Color: Black Hammertone
Max. Capacity: 500 lbs / 227 kgs..
Weight: 40 lbs. / 18.2 kgs.
Dimensions: L31" x W26" x H43"
L78.7cm x W66cm x H109.2cm

Features:
- Fully Collapsible
- Adjustable Riser with 5/8" Pin Accommodates Monitor Height
- Battery Pan (D12" x W15 1/2" x H2") (D30.5cm x W39.4cm x H5.1cm)
- Wheels (2) 5" Thermal Swivel Casters with Brake & (2) 10" Pneumatic Offset Wheels

Accessories:
- Mag Dual Video 5/8" Monitor Bracket **(MAG-V)** $ 124.00
- Mag Adjustable Dual Video Baby Riser with 5/8" Baby Receiver **(MAG-VPR)** $ 319.00
- Mag LCD Tilter Head with 75/100mm VESA Adapter Plate (3 - 24 lbs.) **(MAG-LCD TH-LD BK)** $ 86.50
- Mag LCD 4" Tilt Head Pin Adapter **(MAG-LCD MR-04)** $ 52.00
- 9" Monitor Tray **(VA-01)** $ 175.00
- 13" Monitor Tray **(VA-02)** $ 185.00

Options:
- Foam Filled Tires **(WA-10 FOAM OS)** $ 98.00

Replacement parts:
- 5" Thermal Swivel Caster with Brake **(W-05 SCBRX)** $ 23.00
- 10" Pneumatic Tire **(WA-10 TIRE)** $ 23.00
- 10" Pneumatic Tube **(WA-10 TUBE)** $ 8.75
- 10" Pneumatic Offset Wheel **(W-10 OS34X)** $ 47.50
- 3/4" Sealed Bearing **(WA-34 BR)** $ 2.75 (Need (2) per Wheel)

Shipping Dimensions: L24" x W24" x H13" (44 lbs.)
L61cm x W61cm x H33cm (20 kgs.)

V-02 TR Shown with optional Adjustable Dual Video Baby Riser, VESA Plates, Tilt Heads & Tilt Head Pin Adapters

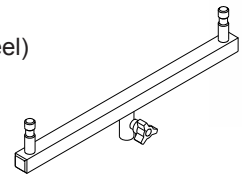

Mag Video Dual Bracket

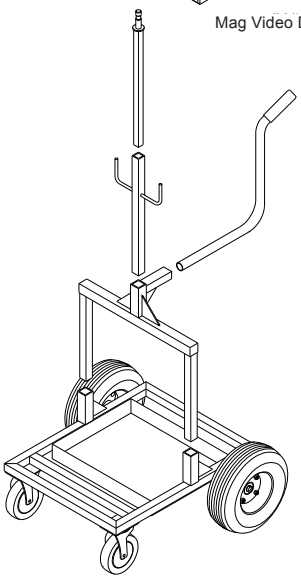

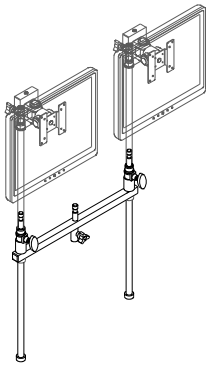

Mag Adustable Dual V ideo Baby Riser with 5/8" Baby Receiver

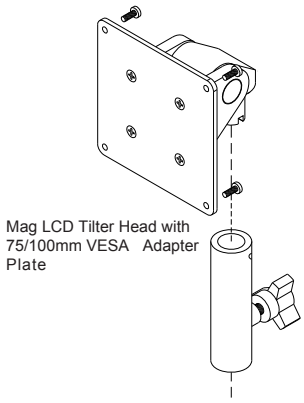

Mag LCD Tilter Head with 75/100mm VESA Adapter Plate

Mag LCD 4" Tilt Head Pin Adapter

Backst age Equipment, Inc. Toll Free (800) 692-2787 • Tel (818) 504-6026 • Fax (818) 504-6180 • info@backstageweb.com • www.backstageweb.com

Fisher-10 Dolly Parts Cart

Part No. CADDIE-02

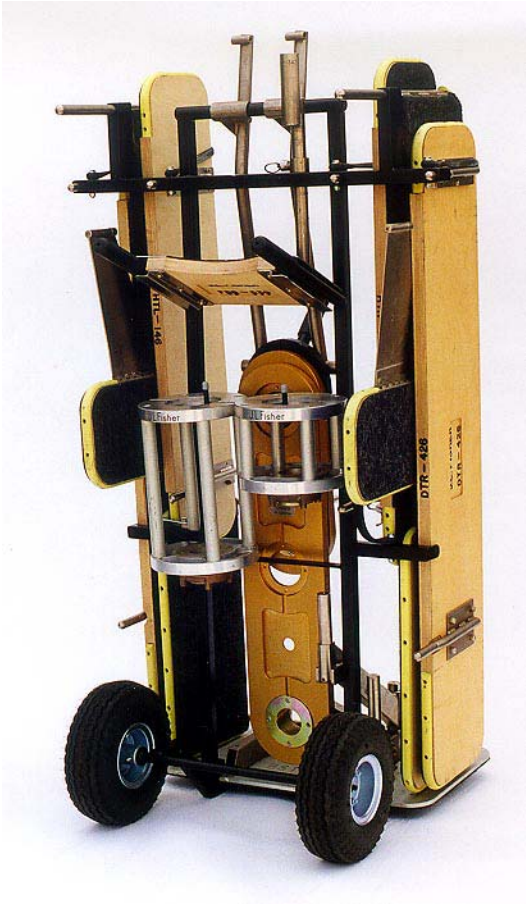

Sale Price: $ 730.00
Material: Steel
Color: Black Hammertone
Max. Capacity: 500 lbs. / 227 kgs.
Weight: 32 lbs. / 14.6 kgs.
Dimensions: L24" x W31 1/4" x H53 1/2"
L61cm x W79.4cm x H135.9cm

Features:
- Fully Collapsible
- Accommodates all Basic Fisher-10 Caddie Accessories
- (2) 10" Pneumatic Offset Wheels

Accessories:

Options:
- Foam Filled Tires **(WA-10 FOAM OS)** $ 98.00

Replacement parts:
- 10" Pneumatic Tire **(WA-10 TIRE)** $ 23.00
- 10" Pneumatic Tube **(WA-10 TUBE)** $ 8.75
- 10" Pneumatic Offset Wheel **(W-10 OS34X)** $ 47.50
- 3/4" Sealed Bearing **(WA-34 BR)** $ 2.75 (Need (2) per Wheel)

Shipping Dimensions: L31" x W21" x H28" (52 lbs.)
L78.7cm x W53.3cm x H71.1cm (23.6 kgs.)

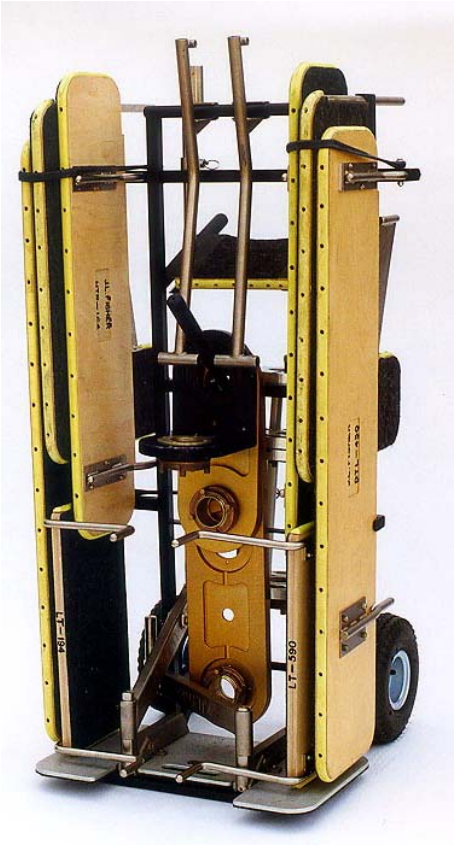

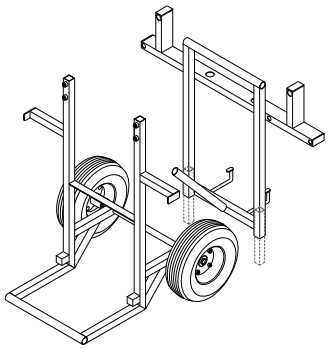

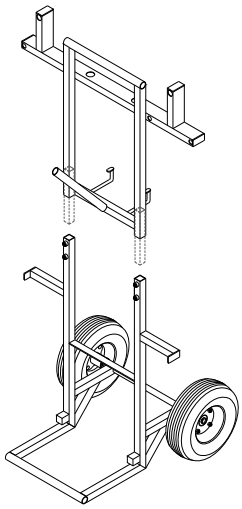

Fisher-11 Dolly Parts Cart

Part No. CADDIE-04

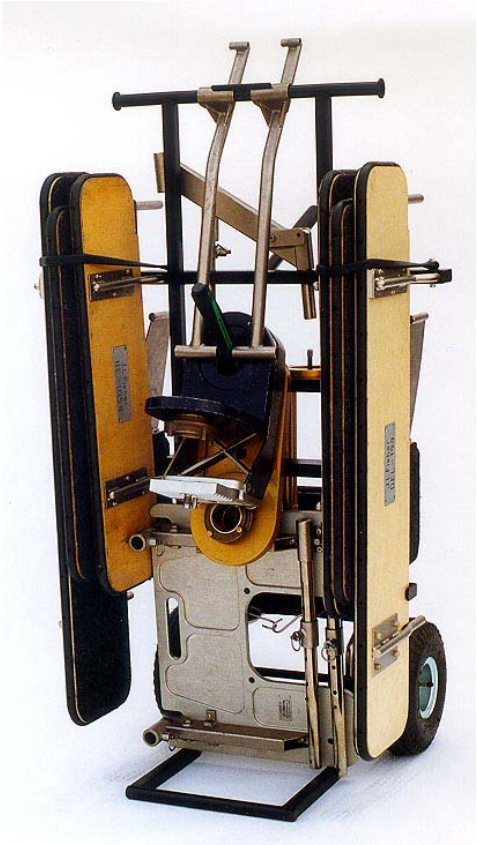

Sale Price: $ 730.00
Material: Steel
Color: Black Hammertone
Max. Capacity: 500 lbs. / 227 kgs.
Weight: 34 lbs. / 15.5 kgs.
Dimensions: L24" x W31 1/4" x H53 1/2"
L61cm x W79.4cm x H135.9cm

Features:
- Fully Collapsible
- Accommodates all Basic Fisher-1 1 Caddie Accessories
- (2) 10” Pneumatic Offset Wheels

Accessories:

Options:
- Foam Filled Tires **(WA-10 FOAM OS)** $ 98.00

Replacement parts:
- 10” Pneumatic Tire **(WA-10 TIRE)** $ 23.00
- 10” Pneumatic Tube **(WA-10 TUBE)** $ 8.75
- 10” Pneumatic Offset Wheel **(W-10 OS34X)** $ 47.50
- 3/4” Sealed Bearing **(WA-34 BR)** $ 2.75 (Need (2) per Wheel)

Shipping Dimensions: L31” x W21” x H28” (51 lbs.)
L78.7cm x W53.3cm x H71.1cm (23.2 kgs.)

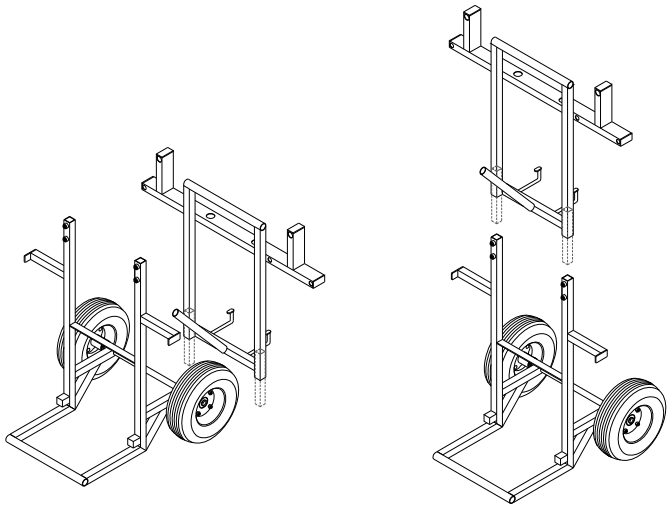

Backst age Equipment, Inc. Toll Free (800) 692-2787 • Tel (818) 504-6026 • Fax (818) 504-6180 • info@backstageweb.com • www.backstageweb.com

Pee-Wee Dolly Parts Cart

Part No. CADDIE-03

Sale Price: $ 730.00
Material: Steel
Color: Black Hammertone
Max. Capacity: 500 lbs. / 227 kgs.
Weight: 30 lbs. / 13.6 kgs.
Dimensions: L24" x W23" x H53"
L61cm x W58.4cm x H134.6cm

Features:
- Fully Collapsible
- Accommodates all Basic Pee-W ee Caddie Accessories
- (2) 10" Pneumatic Offset Wheels

Accessories:

Options:
- Foam Filled Tires **(WA-10 FOAM OS)** $ 98.00

Replacement parts:
- 10" Pneumatic Tire **(WA-10 TIRE)** $ 23.00
- 10" Pneumatic Tube **(WA-10 TUBE)** $ 8.75
- 10" Pneumatic Offset Wheel **(W-10 OS34X)** $ 47.50
- 3/4" Sealed Bearing **(WA-34 BR)** $ 2.75 (Need (2) per Wheel)

Shipping Dimensions: L30" x W21" x H21" (39 lbs.)
L76.2cm x W53.3cm x H53.3cm (17.7 kgs.)

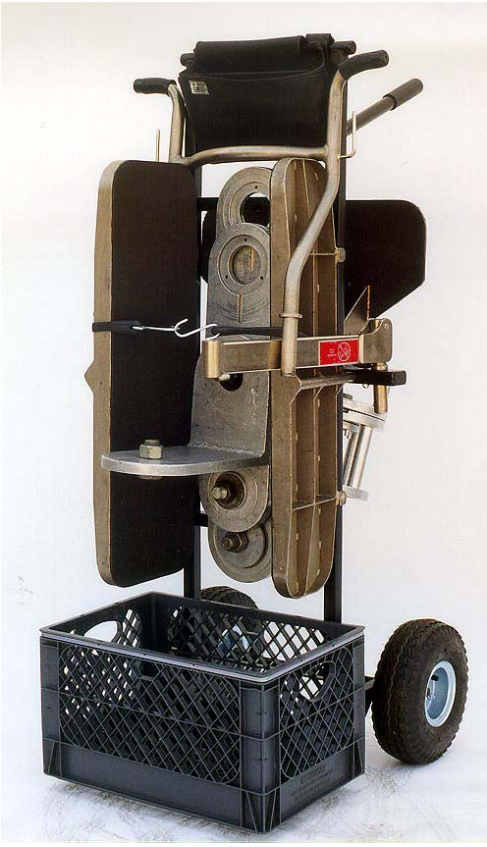

NOTE: Milk Crates not included

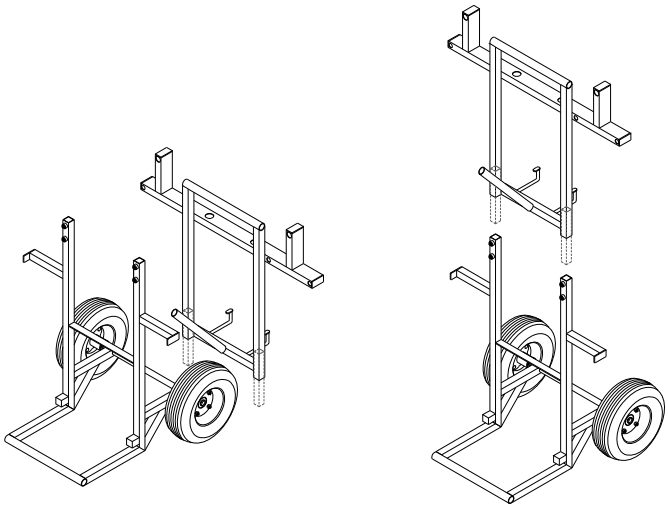

Hustler Dolly Parts Cart

Part No. CADDIE-01

Sale Price: $ 695.00
Material: Steel
Color: Black Hammertone
Max. Capacity: 500 lbs. / 227 kgs.
Weight: 33 lbs. / 15 kgs.
Dimensions: L24" x W24 1/2" x H56 1/4"
L61cm x W62.2cm x H142.9cm

Features:
• Accommodates all Basic Hustler Caddie Accessories
• (2) 10” Pneumatic Offset Wheels

Accessories:

Options:
• Foam Filled Tires **(WA-10 FOAM OS)** $ 98.00

Replacement parts:
• 10” Pneumatic Tire **(WA-10 TIRE)** $ 23.00
• 10” Pneumatic Tube **(WA-10 TUBE)** $ 8.75
• 10” Pneumatic Offset Wheel **(W-10 OS34X)** $ 47.50
• 3/4” Sealed Bearing **(WA-34 BR)** $ 2.75 (Need (2) per Wheel)

Shipping Dimensions: L25” x W25” x H58” (58 lbs.)
L63.5cm x W63.5cm x H147.3cm (26.4 kgs.)

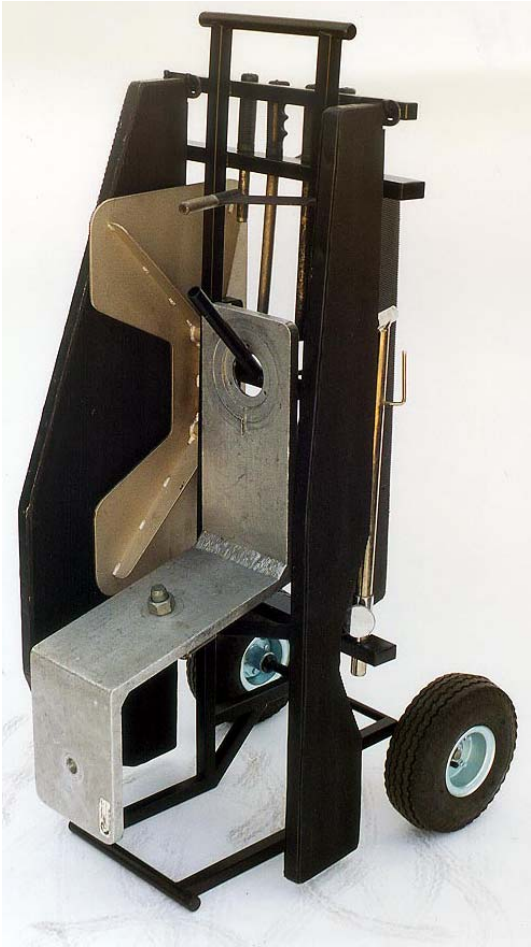

Backst age Equipment, Inc. Toll Free (800) 692-2787 • Tel (818) 504-6026 • Fax (818) 504-6180 • info@backstageweb.com • www.backstageweb.com

Hybrid Dolly Parts Cart

Part No. CADDIE-05

Sale Price: $ 750.00
Material: Steel
Color: Black Hammertone
Max. Capacity: 500 lbs. / 227 kgs.
Weight: 33 lbs. / 15 kgs.
Dimensions: L24 1/4" x W24 1/4" x H56 1/4"
L61.6cm x W61.6cm x H142.9cm

Features:
• Accommodates all Basic Hybrid Caddie Accessories
• (2) 10” Pneumatic Offset Wheels

Accessories:

Options:
• Foam Filled Tires **(WA-10 FOAM OS)** $ 98.00

Replacement parts:
• 10” Pneumatic Tire **(WA-10 TIRE)** $ 23.00
• 10” Pneumatic Tube **(WA-10 TUBE)** $ 8.75
• 10” Pneumatic Offset Wheel **(W-10 OS34X)** $ 47.50
• 3/4” Sealed Bearing **(WA-34 BR)** $ 2.75 (Need (2) per Wheel)

Shipping Dimensions: L20” x W25” x H58” (59 lbs.)
L50.8cm x W63.5cm x H147.3cm (26.8 kgs.)

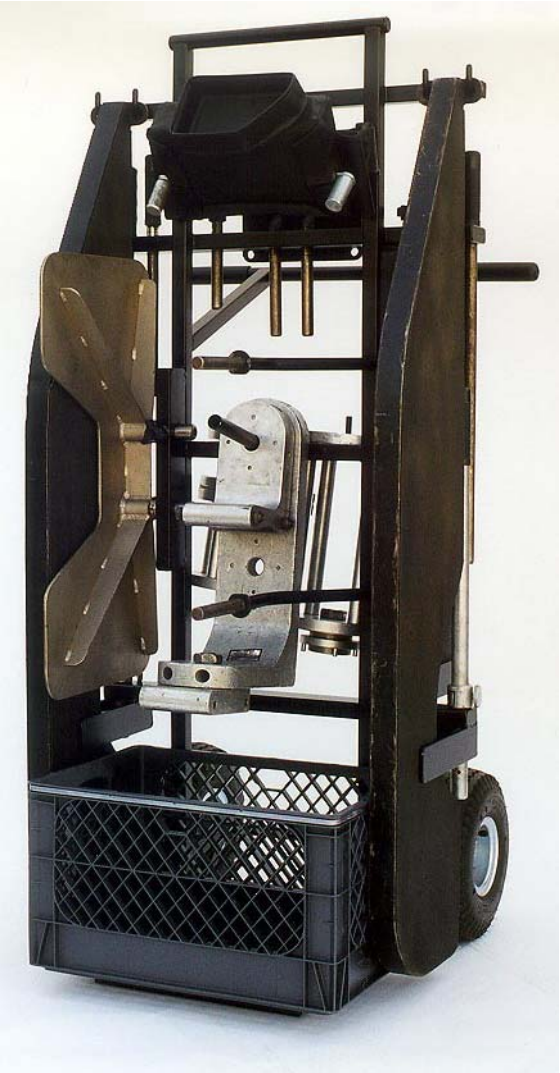

Shot Bag Cart

Part No. GE-20

Sale Price: $ 805.00
Material: Steel
Color: Black Hammertone
Max. Capacity: 600 lbs. / 272.7 kgs.
Weight: 68 lbs. / 30.9 kgs.
Dimensions: D33 5/8" x W19 1/4" x H36 3/8"
D85.41cm x W48.9cm x H92.4cm
D26 3/4" x W19 1/4" x H27 1/2" (Handles down)
D68cm x W48.9cm x H69.9cm (Handles down)

Features:
- Holds (16-20) 15 lb. Shot Bags
- Retracting Handles allows you to store cart under truck shelving
- Carriage Base D20" x W11" x H16" (D50.8cm x W27.9cm x H40.6cm)
- (4) 10" Pneumatic Offset Wheels
- Hand Brake

Accessories:

Options:
- Foam Filled Tires **(WA-10 FOAM OS)** $ 196.00

Replacement parts:
- 10" Pneumatic Tire **(WA-10 TIRE)** $ 23.00
- 10" Pneumatic Tube **(WA-10 TUBE)** $ 8.75
- 10" Pneumatic Offset Wheel **(W-10 OS34X)** $ 47.50
- 3/4" Sealed Bearing **(WA-34 BR)** $ 2.75 (Need (2) per Wheel)

Shipping Dimensions: L28" x W20" x H34" (110 lbs.) Includes pallet
L71.12cm x W50.8cm x H86.4cm (50 kgs.)

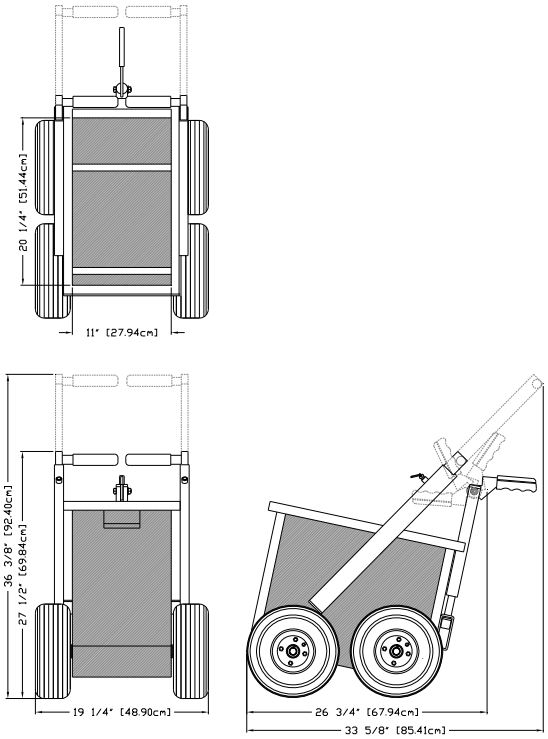

Backstage Equipment, Inc. Toll Free (800) 692-2787 • Tel (818) 504-6026 • Fax (818) 504-6180 • info@backstageweb.com • www.backstageweb.com

Lead Sled Weight Cart

Part No. G-15

Sale Price: $ 885.00
Material: Steel
Color: Black Hammertone
Max. Capacity: 1,000 lbs. / 454 kgs.
Weight: 175 lbs. / 79.6 kgs.
Dimensions: D34" x W30" x H37 1/2"
D86.4cm x W76.2cm x H95.3cm
D28" x W30" x H25" (Handles down)
D71.1cm x W76.2cm x H63.5cm (Handles down)

Features:
- Accommodates most popular Crane and Jib Arm lead weights
- Made of Heavy Duty Steel and Diamond Plate
- 1" Diameter Axles (Cold Roll Steel)
- Retracting Handles
- (2) Tie Down Lock Hooks
- Handle Brake
- Wheels (4) 10" Poly Steel with HD Roller Bearings

Accessories:

Options:
- Pneumatic Wheels with HD Roller Bearings **(W-10 OS1.00X)** $ 60.50

Replacement parts:
- 10" 10 x 2.5 Poly Steel Wheel (Red) **(W-10 PUOSRED)** $ 84.00
- 1" Roller Bearing (Retainers not included) **(WA-1 BR-ROL)** $ 8.00
- 1" Retainer (2 needed per wheel) **(WA-1 BR-ROL RET)** $ 2.00

Shipping Dimensions: L29" x W31" x H31" (215 lbs.) w/Pallet
L73.7cm x W78.7cm x H78.7cm (97.7 kgs.)

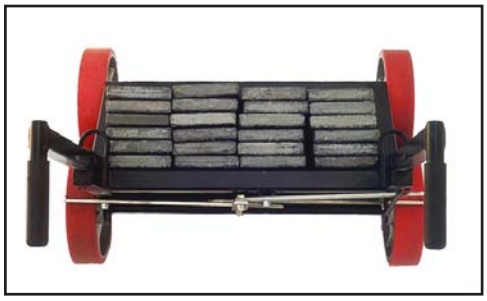

Lead Sled G-15Top view (Courtesy of Chapman)

Load capacity by number of weights:

Chapman Crane	24
Matthews Tulip Crane	12
Egripment Crane	12
Fisher Jib Arm	28 (L), 60 (S)
Panther Jib Arm/Crane	10
Pegasus Crane	10
Giraffe Crane	18

Super Mario Weight Cart

Part No. G-14

Sale Price: $ 985.00
Material: Steel
Color: Black Hammertone
Max. Capacity: 1,000 lbs. / 454 kgs.
Weight: 195 lbs. / 88.6 kgs.
Dimensions: D43" x W30" x H35 1/2"
L109.2cm x W76.2cm x H90.2cm
L34" x W30" x H24" (Handles down)
L86.4cm x W76.2cm x H61cm (Handles down)

Lead Sled G-14 (Courtesy of Chapman)

Features:
- Accommodates most popular Crane and Jib Arm lead weight
- Made of Heavy Duty Steel and Diamond Plate
- 1" Diameter Axles (Cold Roll Steel)
- Retracting Handles
- (2) Tie Down Lock Hooks
- Handle Brake
- Wheels (4) 10" Poly Steel with HD Roller Bearings

Accessories:

Options:
- Pneumatic Wheels with HD Roller Bearings **(W-10 OS1.00X)** $ 60.50

Replacement parts:
- 10" 10 x 2.5 Poly Steel Wheel (Red) **(W-10 PUOSRED)** $ 84.00
- 1" Roller Bearing (Retainers not included) **(WA-1 BR-ROL)** $ 8.00
- 1" Retainer (2 needed per wheel) **(WA-1 BR-ROL RET)** $ 2.00

Shipping Dimensions: L35" x W31" x H30" (235 lbs.) w/Pallet
L88.9cm x W78.7cm x H76.2cm (106.8 kgs.)

Super Mario G-14 loaded with Giraffe lead weights
(Courtesy of Isaia and Company)

Load capacity by number of weights:

Chapman Crane	36
Matthews Tulip Crane	32
Egripment Crane	32
Fisher Jib Arm	98 (L), 140 (S)
Panther Jib Arm/Crane	21
Pegasus Crane	21
Giraffe Crane	18

Backstage Equipment, Inc. Toll Free (800) 692-2787 • Tel (818) 504-6026 • Fax (818) 504-6180 • info@backstageweb.com • www.backstageweb.com

Long John Silver Stand Cart (Avenger)

Part No. GE-18

Sale Price: $ 1,150.00
Material: Steel
Color: Black Hammertone
Max. Capacity: 400 lbs. / 364 kgs.
Weight: 109 lbs. / 49.5 kgs.
Dimensions: L42 1/4" x W25" x H53 11/16"
L104.1cm x W63.5cm x H136.4cm

New

NOTE: Milk Crates not included

Features:
- Transports Long John Silver Stand (Avenger)
- Clears all doors under 80" with Stand mounted
- One Man Operation
- (2) 8" Pneumatic Swivel Casters Wheels with Brakes & (2) 10" Offset Pneumatic Wheels
- Milk Crate Compartment
- Jockey Box
- Foot Brake

Accessories:

Options:
- Milk Crate **(B-03)** $ 20.00
- Full Milk Crate Liner **(B-04)** $ 12.50
- Foam Filled Tires **(WA-10 FOAM OS)** $ 98.00
- Foam Filled Tires **(WA-08 FOAM CTR)** $ 86.00

Replacement parts:
- 10" Pneumatic Tire **(WA-10 TIRE)** $23.00
- 10" Pneumatic Tube **(WA-10 TUBE)** $ 8.75
- 10" Pneumatic Offset Wheel **(W- OS34X)** $ 47.50
- 8" Pneumatic Tire **(WA-08 TIRE)** $ 18.00
- 8" Pneumatic Tube **(WA-08 TUBE)** $ 8.00
- 8" Pneumatic Swivel Caster Wheel with Brakes **(W-08 SCBRX)** $ 53.50

Shipping Dimensions: L37" x W26" x H61" (123 lbs.)
L94cm x W66cm x H155cm (56 kgs.)

Set Stand next to cart, lock brakes on cart

Rotate cart to align with stand, set Locking Pin

Rotate cart back

Long John Silver Jr. Stand Cart (Avenger)

Part No. GE-18 JR

Sale Price: $ 1,150.00
Material: Steel
Color: Black Hammertone
Max. Capacity: 400 lbs. / 364 kgs.
Weight: 108 lbs. / 49.1 kgs.
Dimensions: L41 1/4" x W25" x H52 1/4"
L104.1cm x W63.5cm x H132.7cm

New

NOTE: Milk Crates not included

Features:
- Transports Long John Silver Junior S tand (Avenger)
- Clears all doors under 80" with S tand mounted
- One Man Operation
- (2) 8" Pneumatic Swivel Casters Wheels with Brakes & (2) 10" Offset Pneumatic Wheels
- Milk Crate Compartment
- Jockey Box
- Foot Brake

Accessories:

Options:
- Milk Crate **(B-03)** $ 20.00
- Full Milk Crate Liner **(B-04)** $ 12.50
- Foam Filled Tires **(WA-10 FOAM OS)** $ 98.00
- Foam Filled Tires **(WA-08 FOAM CTR)** $ 86.00

Replacement parts:
- 10" Pneumatic Tire **(WA-10 TIRE)** $23.00
- 10" Pneumatic Tube **(WA-10 TUBE)** $ 8.75
- 10" Pneumatic Offset Wheel **(W- OS34X)** $ 47.50
- 8" Pneumatic Tire **(WA-08 TIRE)** $ 18.00
- 8" Pneumatic Tube **(WA-08 TUBE)** $ 8.00
- 8" Pneumatic Swivel Caster Wheel with Brakes **(W-08 SCBRX)** $ 53.50

Shipping Dimensions: L37" x W26" x H61" (124 lbs.)
L94cm x W66cm x H155cm (56.4 kgs.)

Quick Release Pin (Close-up)

Set Stand next to cart, lock brakes on cart

Rotate cart to align with stand, set Locking Pin

Rotate cart back

Backst age Equipment, Inc. Toll Free (800) 692-2787 • Tel (818) 504-6026 • Fax (818) 504-6180 • info@backstageweb.com • www.backstageweb.com

Strato Safe B150P Stand Cart (Avenger)

Part No. GE-22

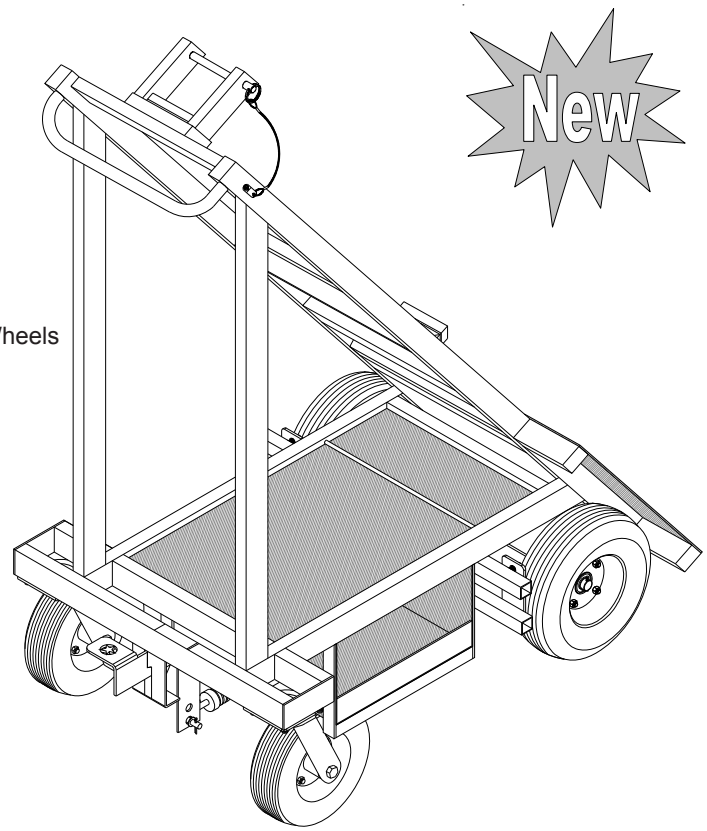

Sale Price: $ 1,150.00
Material: Steel
Color: Black Hammertone
Max. Capacity: 400 lbs. / 364 kgs.
Weight: 107 lbs. / 48.7 kgs.
Dimensions: L41 1/4" x W25" x H55 7/8"
L104.8cm x W63.5cm x H141.9cm

Features:
- Transports Strato Safe B150P Stand (Avenger) with Pneumatic Wheels
- Clears all doors under 80” with S tand mounted
- One Man Operation
- (2) 8” Pneumatic Swivel Casters Wheels with Brakes & (2) 10” Offset Pneumatic Wheels
- Milk Crate Compartment
- Jockey Box
- Foot Brake

Accessories:

Options:
- Milk Crate **(B-03)** $ 20.00
- Full Milk Crate Liner **(B-04)** $ 12.50
- Foam Filled Tires **(WA-10 FOAM OS)** $ 98.00
- Foam Filled Tires **(WA-08 FOAM CTR)** $ 86.00

NOTE: Milk Crates not included

Replacement parts:
- 10” Pneumatic Tire **(WA-10 TIRE)** $23.00
- 10” Pneumatic Tube **(WA-10 TUBE)** $ 8.75
- 10” Pneumatic Offset Wheel **(W- OS34X)** $ 47.50
- 8” Pneumatic Tire **(WA-08 TIRE)** $ 18.00
- 8” Pneumatic Tube **(WA-08 TUBE)** $ 8.00
- 8” Pneumatic Swivel Caster Wheel with Brakes **(W-08 SCBRX)** $ 53.50

Shipping Dimensions: L37” x W26” x H61” (124 lbs.)
L94cm x W66cm x H155cm (56.4 kgs.)

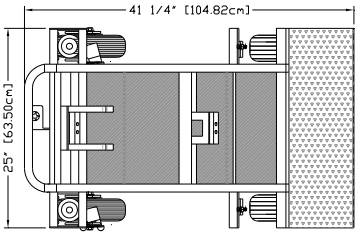

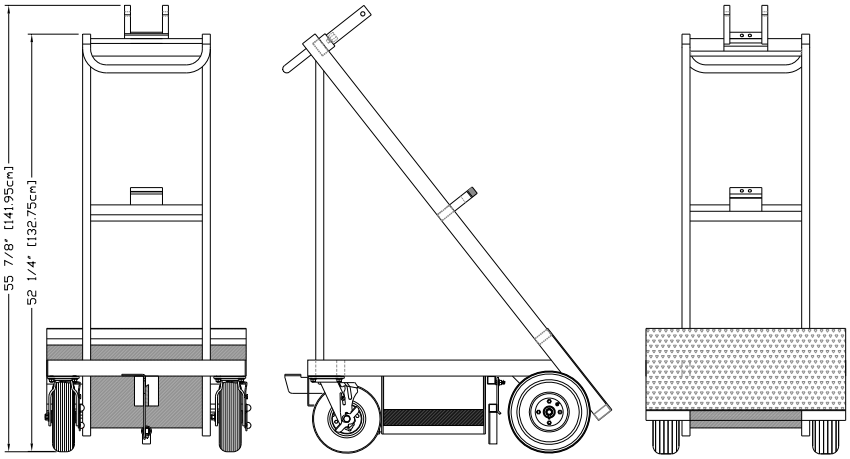

Strato Safe B150 Stand Cart UK (Avenger)

Part No. GE-22 UK

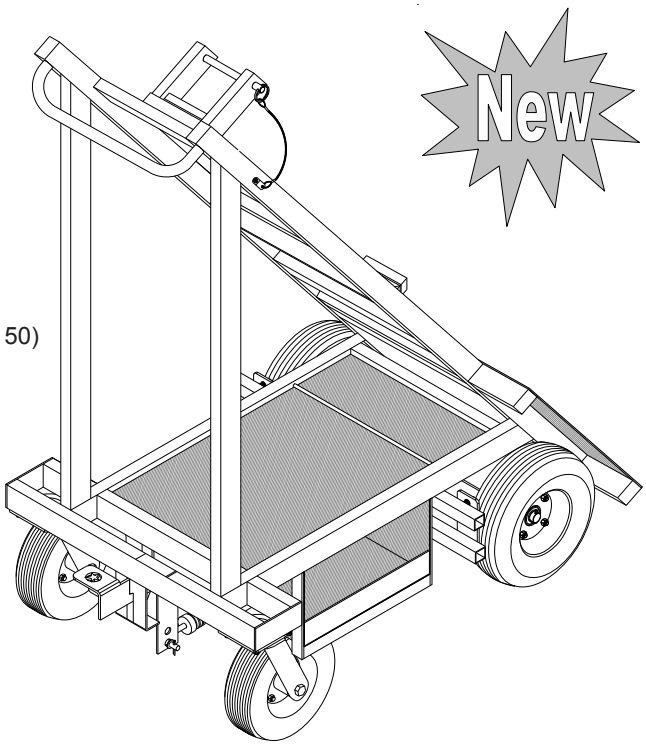

Sale Price: $ 1,150.00
Material: Steel
Color: Black Hammertone
Max. Capacity: 400 lbs. / 364 kgs.
Weight: 107 lbs. / 48.7 kgs.
Dimensions: L41 1/4" x W25" x H52 3/4"
L104.8cm x W63.5cm x H134cm

Features:
- Transports Strato Safe B150 Stand (Avenger) with Solid Wheels (160 x 50)
- Clears all doors under 80” with S tand mounted
- One Man Operation
- (2) 8” Pneumatic Swivel Casters Wheels with Brakes & (2) 10” Offset Pneumatic Wheels
- Milk Crate Compartment
- Jockey Box
- Foot Brake

Accessories:

Options:
- Milk Crate **(B-03)** $ 20.00
- Full Milk Crate Liner **(B-04)** $ 12.50
- Foam Filled Tires **(WA-10 FOAM OS)** $ 98.00
- Foam Filled Tires **(WA-08 FOAM CTR)** $ 86.00

NOTE: Milk Crates not included

Replacement parts:
- 10” Pneumatic Tire **(WA-10 TIRE)** $ 23.00
- 10” Pneumatic Tube **(WA-10 TUBE)** $ 8.75
- 10” Pneumatic Offset Wheel **(W- OS34X)** $ 47.50
- 8” Pneumatic Tire **(WA-08 TIRE)** $ 18.00
- 8” Pneumatic Tube **(WA-08 TUBE)** $ 8.00
- 8” Pneumatic Swivel Caster Wheel with Brakes **(W-08 SCBRX)** $ 53.50

Shipping Dimensions: L37” x W26” x H61” (124 lbs.)
L94cm x W66cm x H155cm (56.4 kgs.)

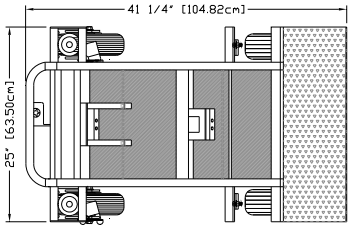

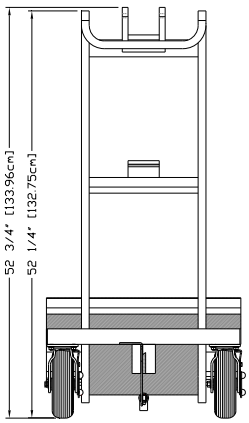

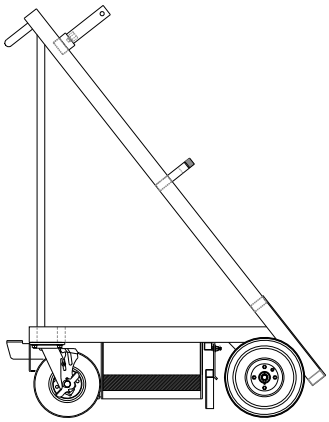

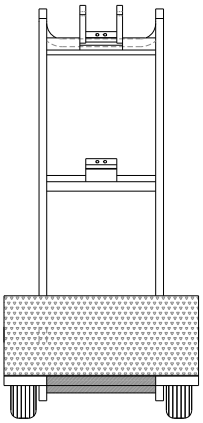

Backst age Equipment, Inc. Toll Free (800) 692-2787 • Tel (818) 504-6026 • Fax (818) 504-6180 • info@backstageweb.com • www.backstageweb.com

Blackbird Stand Cart (American)

Part No. GE-21

NOTE: Milk Crates not included

Sale Price: $ 1,150.00
Material: Steel
Color: Black Hammertone
Max. Capacity: 400 lbs. / 364 kgs.
Weight: 108 lbs. / 49.1 kgs.
Dimensions: L41 17/32" x W25" x H52 7/8"
L104.1cm x W63.5cm x H134.3cm

Features:
- Transports Blackbird S tand (American)
- Clears all doors under 80” with S tand mounted
- One Man Operation
- (2) 8” Pneumatic Swivel Casters Wheels with Brakes & (2) 10” Offset Pneumatic Wheels
- Milk Crate Compartment
- Jockey Box
- Foot Brake

Accessories:

Options:
- Milk Crate **(B-03)** $ 20.00
- Full Milk Crate Liner **(B-04)** $ 12.50
- Foam Filled Tires **(WA-10 FOAM OS)** $ 98.00
- Foam Filled Tires **(WA-08 FOAM CTR)** $ 86.00

Replacement parts:
- 10” Pneumatic Tire **(WA-10 TIRE)** $ 23.00
- 10” Pneumatic Tube **(WA-10 TUBE)** $ 8.75
- 10” Pneumatic Offset Wheel **(W- OS34X)** $ 47.50
- 8” Pneumatic Tire **(WA-08 TIRE)** $ 18.00
- 8” Pneumatic Tube **(WA-08 TUBE)** $ 8.00
- 8” Pneumatic Swivel Caster Wheel with Brakes **(W-08 SCBRX)** $ 53 .50

Shipping Dimensions: L37” x W26” x H61” (122 lbs.)
L94cm x W66cm x H155cm (55.5 kgs.)

Stand Cart Specifications

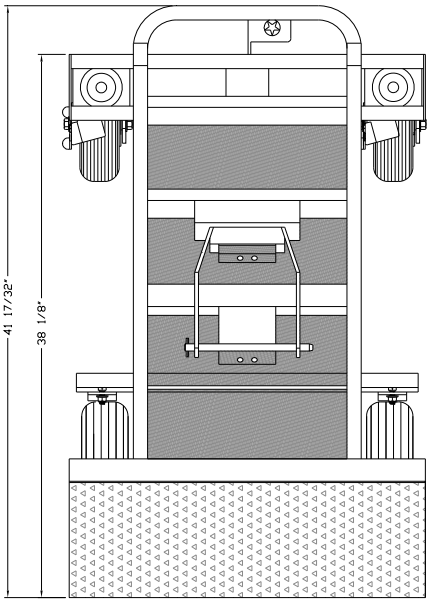

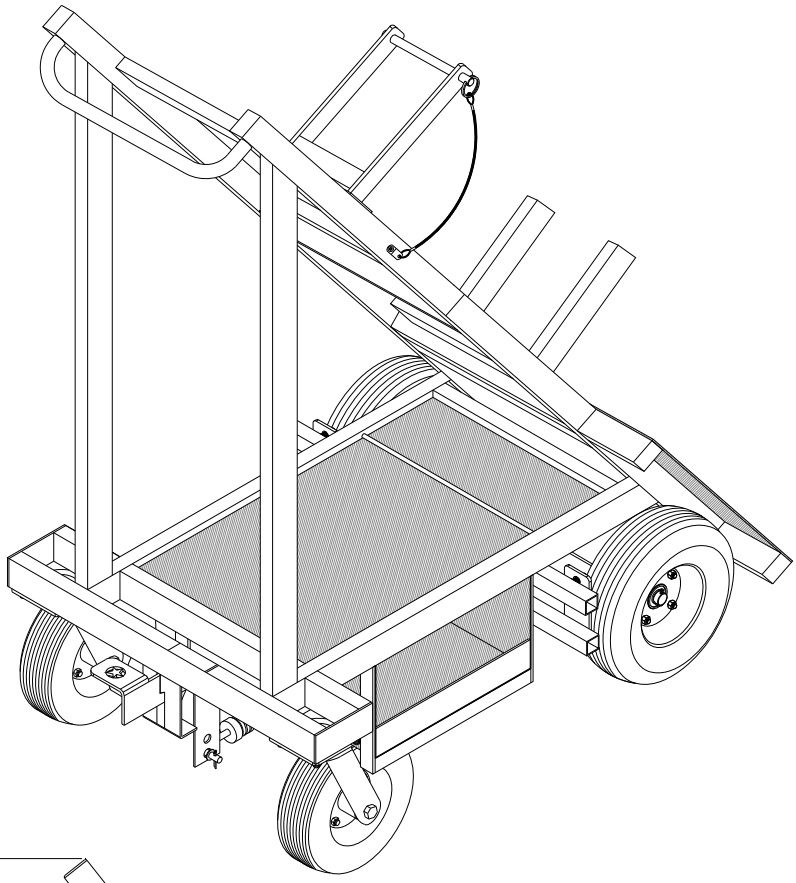

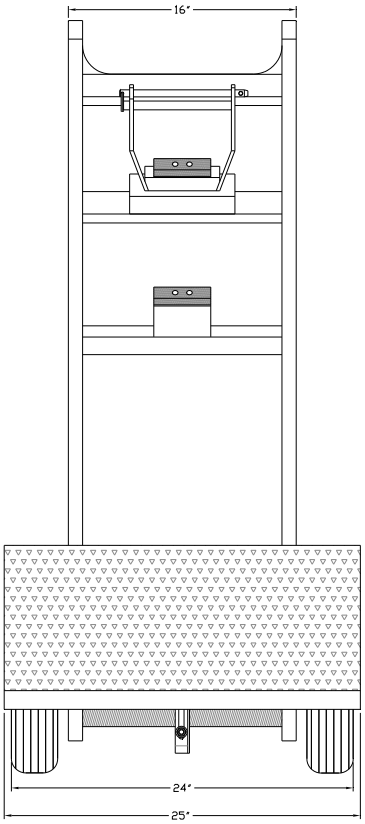

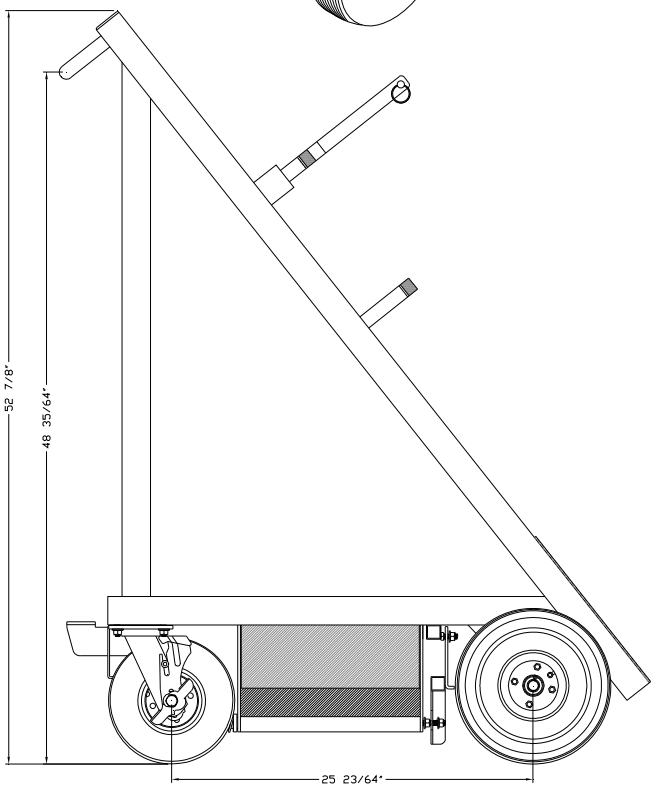

Backst age Equipment, Inc. Toll Free (800) 692-2787 • Tel (818) 504-6026 • Fax (818) 504-6180 • info@backstageweb.com • www.backstageweb.com

Lamp Dolly Base

Part No. E-10 ARRIMAX

Sale Price: $ 645.00
Material: Steel
Color: Black Hammertone
Max. Capacity: 800 lbs. / 364 kgs.
Weight: 65 lbs. / 30 kgs.
Dimensions: L41" x W31 1/2" x H10 3/4"
L104cm x W80cm x H27.3cm

Features:
- Transports large ARRIMAX 12K / 18K Lights
- (2) 8” Pneumatic Swivel Casters Wheels with Brakes & (2) 8” Rigid Caster Wheels
- HD Ratchet straps (2) for transportation security

Accessories:

Options:
- Foam Filled Tires **(WA-08 FOAM CTR)** $ 172.00

Replacement parts:
- 8” Pneumatic Tire **(WA-08 TIRE)** $ 18.00
- 8” Pneumatic Tube **(WA-08 TUBE)** $ 8.00
- 8” Pneumatic Swivel Caster Wheel with Brakes **(W-08 SCBRX)** $ 53.50
- 8” Pneumatic Rigid Caster Wheel **(W-08 RCX)** $ 48.00

Shipping Dimensions: L42” x W33” x H12” (75 lbs.)
L107cm x W83.8cm x H106.7cm (34.1 kgs.)

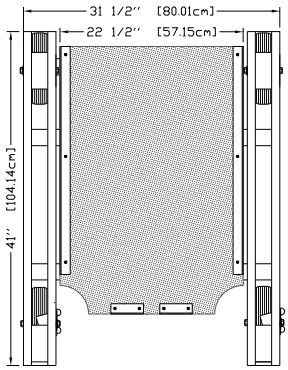

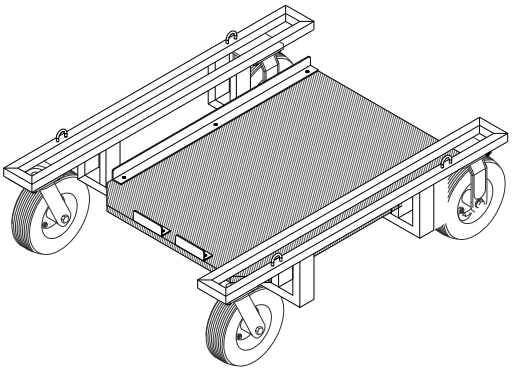

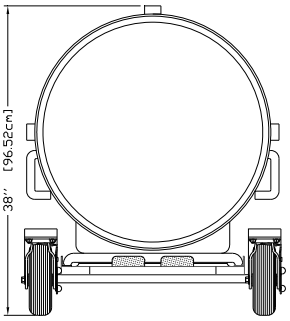

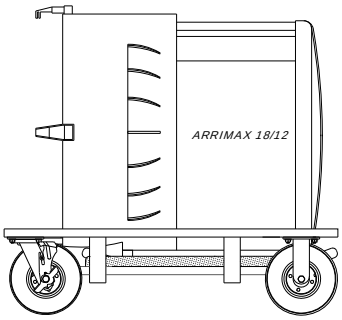

Large Lamp Dolly

Part No. E-10 12-20K

Sale Price: $ 350.00
Material: Steel
Color: Black Hammertone
Max. Capacity: 400 lbs. / 182 kgs.
Weight: 27 lbs. / 12.3 kgs.
Dimensions: L28" x W28" x H8"
L71.1cm x W71.1cm x H20.3cm

Features:
- Takes one person to load and unload
- Transports large 12K, 18K and 20K lights
- Bungee straps for transportation security
- (4) 5" Thermal Swivel Casters with Brake

Accessories:

Options:

Replacement parts:
- 5" Thermal Swivel Casters with Brake **(W-5 SCBRX)** $ 23.00

Shipping Dimensions: L29" x W29" x H9" (45 lbs.)
L73.6cm x W73.6cm x H22.9cm (20.5 kgs.)

Big Wheels

Part No. G-08

Sale Price: $ 1,750.00
Material: Steel
Color: Black Hammertone
Max. Capacity: 500 lbs. / 227.3 kgs.
Weight: 75 lbs. / 34.1 kgs.
Dimensions: D19" x W25" x H18"
L48.3cm x W63.5cm x H45.7cm

Features:
- Transports in rear seat or trunk of small car
- Minimum storage space required
- Cradles to stand's own 10" wheels
- Pull Handle / Braking system
- (6) 19" Pneumatic Balloon Wheels

Accessories:

Options:

Replacement parts:
- 19" Sand Crawler Pneumatic Wheel **(W-19 SCW)** $ 210.00
- 19" Sand Crawler Wheel Bearings **(W-19 SCW-A)** $ 52.00
- 19" Sand Crawler Tire **(W-19 SCW-B)** $ 165.00
- 19" Sand Crawler Wheel Hub **(W19 SCW-C)** $ 47.50

Shipping Dimensions: L52" x W31" x H32" (90 lbs.)
L132.1cm x W78.7cm x H81.3cm (40.9 kgs.)

- Lightweight device uses special wheels to transport Super Crank & Roadrunner stand over sand, grass, snow and rough terrain, replacing conventional desert dollies and clikiti-claks.

Generator Armor (Honda 3000)

Part No. GEN-02

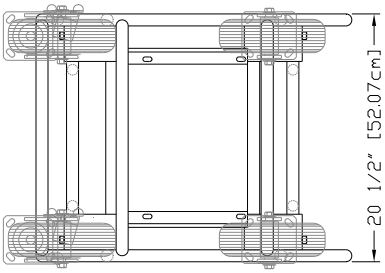

Sale Price: $ 675.00
Material: Steel
Color: Black Hammertone
Max. Capacity: 800 lbs. / 364 kgs.
Weight: 52 lbs. / 23.6 kgs.
Dimensions: L26 1/8" x W20 1/2" x H32 5/8"
L66.4cm x W52cm x H82.9cm

Features:
- Accommodates Honda 3000 Generator
- Generator mounts easily to armor
- Folding handles tuck away within armor
- Wheels: (2) 8" Swivel Casters with Brake and (2) 8" Rigid Casters

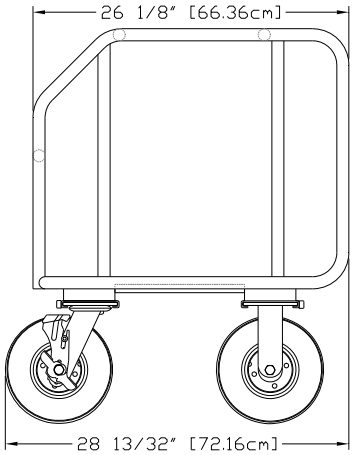

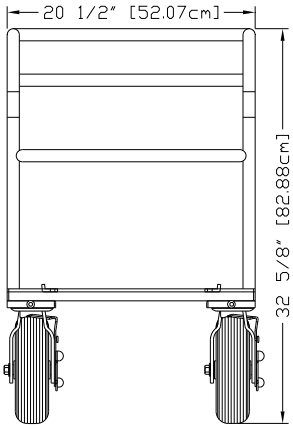

Accessories:
- Sand/Dune Wheel Kit **(TR-04 W)** $ 675.00

Options:
- Foam Filled Tires **(WA-08 FOAM CTR)** $ 172.00

Replacement parts:
- 8" Pneumatic Tire **(WA-08 TIRE)** $ 18.00
- 8" Pneumatic Tube **(WA-08 TUBE)** $ 8.00
- 8" Pneumatic Swivel Caster Wheel **(W-08 SCBRX)** $ 53.50
- 8" Pneumatic Rigid Caster Wheel **(W-08 RCX)** $ 48.00

Shipping Dimensions: L27" x W27" x H22" (61 lbs.)
L68.6cm x W68.6cm x H55.9cm (27.7 kgs.)

Generator Armor (Honda 6500 & 7000)

Part No. GEN-01

Sale Price: $ 925.00
Material: Steel
Color: Black Hammertone
Max. Capacity: 800 lbs. / 364 kgs.
Weight: 66 lbs. / 30 kgs.
Dimensions: L35 3/4" x W23 1/4" x H35 1/4"
L90.8cm x W59.1cm x H89.5cm

Features:
- Accommodates Honda 6500 & 7000 Generator
- Generator mounts easily to armor
- Folding handles tuck away within armor
- Wheels: (2) 8" Swivel Casters with Brake and (2) 8" Rigid Casters
- Foot Brake

Accessories:
- Sand/Dune Wheel Kit **(TR-04 W)** $ 675.00

Options:
- Foam Filled Tires **(WA-08 FOAM CTR)** $ 172.00

Replacement parts:
- 8" Pneumatic Tire **(WA-08 TIRE)** $ 18.00
- 8" Pneumatic Tube **(WA-08 TUBE)** $ 8.00
- 8" Pneumatic Swivel Caster Wheel **(W-08 SCBRX)** $ 53.50
- 8" Pneumatic Rigid Caster Wheel **(W-08 RCX)** $ 48.00

Shipping Dimensions: L37" x W25" x H36" (76 lbs.)
L94cm x W63.5cm x H91.4cm (34.6 kgs.)

Honda 6500 Generator Armor shown with handles down (Front view)

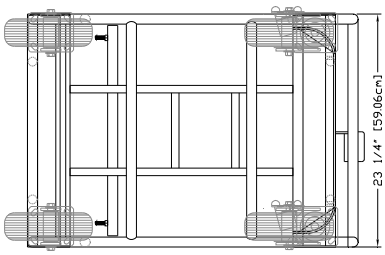

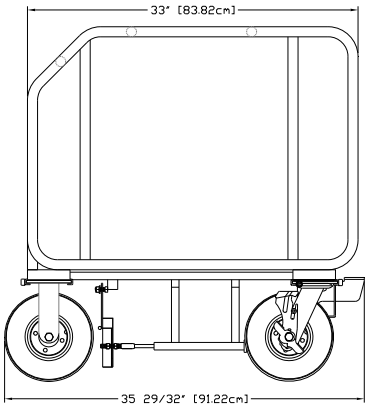

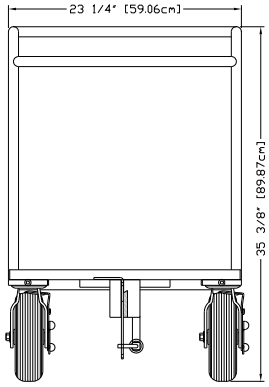

Grip & Electric Cart Equipment

Milk Crates
Style Nos. B-03 & B-05

Milk Crate (Gray) B-03
L19" x W13" x H11" (4.8 lbs.)
L48.3cm x W33cm x H27.9cm (2.2 kgs.)
Sale Price $ 20.00

School Crate (Gray) B-05
L19" x W13" x H6 1/2" (3.7 lbs.)
L48.3cm x W33cm x H16.5cm (1.7 kgs.)
Sale Price $ 20.00

Milk Crate Liner
Style No. B-04

- Allows crates to perform as drawers
- Fits standard milk crates
- 24ga. Galvanized sheet metal

L17 1/2" x W11 1/2" x H10" (4 lbs.)
L44.5cm x W29.2cm x H25.4cm (1.8 kgs.)
Sale Price $ 12.50

School Crate Liner
Style No. B-06

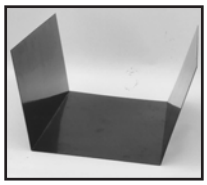

L17 1/2" x W11 1/2" x H5 1/2" (3 lbs.)
L44.5cm x W29.2cm x H14cm (1.4 kgs.)
Sale Price $ 12.00

Gel Holders

GEL G-01 (4 x 4 Grande, 4 x 4 Mini & 4 x 4 Coasters)
- Holds (16) gels

L47 1/2" x D4 3/4" x H27 1/2" (20 lbs.)
L120.7cm x D12.1cm x H69.9cm (9 kgs.)
Sale Price $265.00

GEL SB-S (4-Crate & 6-Crate)
- Holds (13) gels

L41" x D4 3/4" x H27 1/2" (20 lbs.) (Single row)
L104.1cm x D12.1cm x H69.9cm (9 kgs.)
Sale Price $ 232.00

GEL SB-D (4-Crate & 6-Crate)
- Holds (26) gels

L41" x D8.25" x H28" (30 lbs.) (Double row)
L104.1cm x D21cm x H71.1cm (13.6 Kgs.)
Sale Price $ 265.00

18" x 24" Net Basket Double
Style No. B-01D

Sale Price: $ 350.00
Material: Steel
Color: Gray Hammertone
Max. Capacity: 150 lbs. / 68.2 kgs.
Weight: 15 lbs. / 6.8 kgs.
Dimensions: D10 3/4" x W20" x H22 1/4"
D27.3cm x W50.8cm x H56.5cm

Features:
- Holds: (17) Flags 18" x 24" (46cm x 61cm)
- Double compartment
- Attaches 4 x 4 Coaster Carts and front of 24" x 36" (61cm x 92cm) Net Baskets

Shipping Dims:
L12" x W21" x H25" (18 lbs)
L30.5cm x W53.3cm x H63.5cm (8.2 kgs.)

24" x 36" Net Basket Double
Style No. B-02D

Sale Price: $ 405.00
Material: Steel
Color: Gray Hammertone
Max. Capacity: 150 lbs. / 68.2 kgs.
Weight: 21.8 lbs. / 9.9 kgs.
Dimensions: D10 1/2" x W27 3/4" x H30 3/4"
D26.7cm x W70.5cm x H78cm

Features:
- Holds: (17) flags 24" x 36" (61cm x 92cm)
- Double compartment
- Attaches to EZ-Load Grip/Electric Cart

Shipping Dims:
L29" x W13" x H34" (27 lbs.)
L73.7cm x W33cm x H86.4cm (12.3 kgs.)

24" x 36" Net Basket Triple
Style No. B-02T

Sale Price: $ 425.00
Material: Steel
Color: Gray Hammertone
Max. Capacity: 150 lbs. / 68.2 kgs.
Weight: 27.4 lbs. / 12.5 kgs.
Dimensions: D14.1/4" x W27 3/4" x H30"
D36.2cm x W70.5cm x H76.2cm

Features:
- Holds: (26) Flags 24" x 36" (61cm x 92cm)
- Triple compartment
- Attaches to: Super Duz-All, Grip Senior, Grip Junior and 4 X 4 Coaster Carts

Shipping Dims:
L29" x W16" x H35" (36 lbs)
L73.7cm x W41cm x H88.9cm (16.4 kgs.)

24" x 36" Net Basket Triple (Mobile)
Style No. B-02T MOB

Sale Price: $ 495.00
Material: Steel
Color: Gray Hammertone
Max. Capacity: 150 lbs. / 68.2 kgs.
Weight: 40 lbs. / 18.2 kgs.
Dimensions: D14.1/4" x W27 3/4" x H34 5/8"
D36.2cm x W70.5cm x H88cm

Features:
- Holds: (26) Flags 24" x 36" (61cm x 92cm)
- Triple compartment
- (2) 3" Swivel Casters with brakes
- (2) 3" Swivel Casters
- Attaches to: Super Duz-All, Grip Senior, Grip Junior and 4 X 4 Coaster Carts

Shipping Dims:
L29" x W16" x H39" (47 lbs)
L73.7cm x W41cm x H99.1cm (16.4 kgs.)

Camera Case Cart (Aluminum)

Part No. TR-04

Sale Price: $ 1,925.00
Material: Aluminum
Color: Black Texture
Max. Capacity: 1,000 lbs. / 454 kgs.
Weight: 100 lbs. / 45.5 kgs.
Dimensions: L55 3/16" x W24 9/16" x H52 3/4"
L140.2cm x W62.4cm x H134cm
(Case ready) L55 1/4" x W24 9/16" x H8 5/8"
(Case ready) L140.3cm x W62.4cm x H21.9cm

Features:
- Adjustable Top Shelf (L51" x W24 5/16" ID) (L129.5cm x W61.8cm ID)
- Stationary Bottom Shelf (L51" x W24 5/16" ID) (L129.5cm x W61.8cm ID)
- Full Size Push/Pull Handle
- A.C. Ready
- Removable Wheels with Safety Lock
- Wheels: (2) 10" Rigid Caster & (2) 10" Swivel Caster With Brake
- Transformer system, fully collapsible
- 5/32" and 3/16" Allen Wrench is all you need to dismantle

Accessories:
- Dove Tail Mount w/ Front Box Holder **(TR-04 DT)** $ 250.00
- Mitchell Mount w/ Front Box Holder **(TR-04 M)** $ 270.00
- 100mm Euro Mount w/ Front Box Holder **(TR-04 EU-100)** $ 320.00
- 150mm Euro Mount w/ Front Box Holder **(TR-04 EU-150)** $ 340.00
- Front Box **(MAG-FB)** $ 265.00
- Tripod Holder with Baby Pin (5/8") **(TR-04 TP)** $ 189.00
- Cross Bar with Baby 5/8" Pin **(TR-04 S)** $ 135.00
- Steadi-Cam Riser Unit with Bumper **(TR-04 SPR)** $ 437.00
- Steadi-Cam Vest Holder **(TR-04 SV)** $ 189.00
- Steadi-Cam Stand Holder **(MAG-SS ES)** $ 65.00
- Push Handles (pair) **(TR-04 H)** $ 103.00
- 46" Camera Utility Box **(MAG-UB46)** $ 135.00
- Sand Dune Wheel Kit **(TR-04 W)** $ 675.00
- ADP 5/8" Baby Pin **(PIN (ADP))** $ 85.00
- Umbrella Holder (detachable) **(MAG-UH)** $ 103.00
- A.C. with Standard Household Outlets (6) **(TR-04 AC STD)** $ 221.00
- A.C. with Standard Household Outlets (6) and (2) USB Chargers **(TR-04 AC STD USB)** $ 254.00
- A.C. with GFCI Outlets (6) **(TR-04 AC GFCI)** $ 319.00
- A.C. with Spike Protection Outlets (6) **(TR-04 AC SP)** $ 359.00
- 51" Horizontal Cross Bar **(TR-04 SH)** $ 157.00 (5/8" Snap-On Pin not included)
- 24" Cross Bar **(TR-04 SH CB)** $ 119.00 (5/8" Snap-On Pin not included)
- Universal Snap-On 5/8" Baby Pin for Cross Bars **(TR-04 SHP)** $ 81.00

The Aluminum Camera Case Cart is a fully collapsible cart. It is held together by four round posts which attach to a bottom and top shelf by using telescopic locks operated with a 5/32 Allen wrench. All accessories are attached in the same manner. Top Shelf is adjustable and can be set at any height.
The wheels are detached by sliding them out of a rail unit secured by a hex screw and safety button.
Cart breaks down to a self-contained travel case.
Note: TR-04 and TR-04 JR Carts come A.C. ready.

Options:
- Foam Filled Tires **(WA-10 FOAM CTR)** $ 196.00
- Middle Shelf **(TR-04 A3)** $ 585.00

Replacement parts:
- 10" Pneumatic Tire **(WA-10 TIRE)** $ 23.00
- 10" Pneumatic Tube **(WA-10 TUBE)** $ 8.75
- 10" Pneumatic Rigid Caster Wheel **(W-10 RCX)** $ 59.50
- 10" Pneumatic Swivel Caster Wheel with Brakes **(W-10 SCBRX)** $ 73.00

Shipping Dimensions: L57" x W28" x H15" (143 lbs.) w/Pallet
L145cm x W71.1cm x H38.1cm (65 kgs.) w/Pallet

TR-04 AC with GFCI Outlets & 120v Input & Output Courtesy Plug

Camera Case Cart (Cont.)

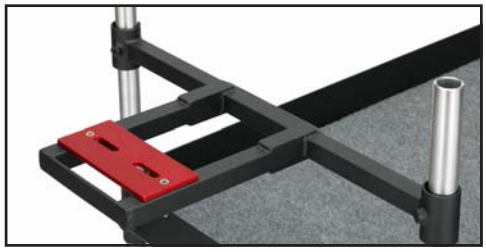
Dove Tail Mount (TR-04 DT)

Mitchell Mount (TR-04 M)

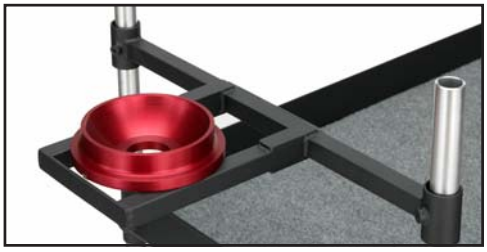
150mm Euroball Mount (TR-04 EU150)

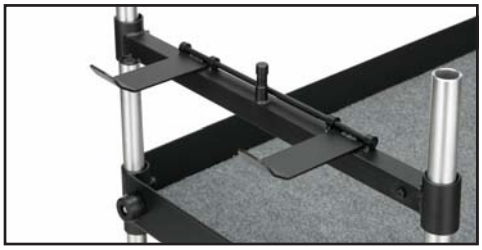
Tripod Holder with 5/8” Baby Pin (TR-04 TP)

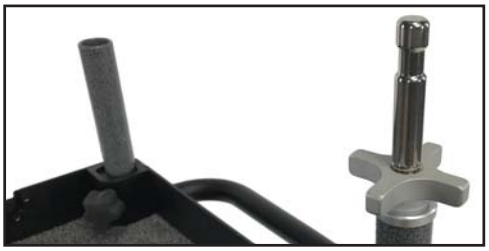
ADP 5/8” Baby Pin Mounted on Vertical Pole

Umbrella Holder (MAG-UH) mounted on Cross Bar

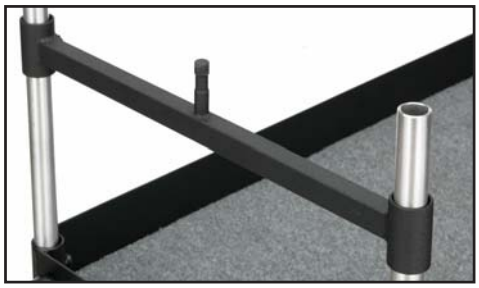
Cross Bar with 5/8” Baby Pin (TR-04 S)

Hi/Lo Hat Holder (TR-04 O)

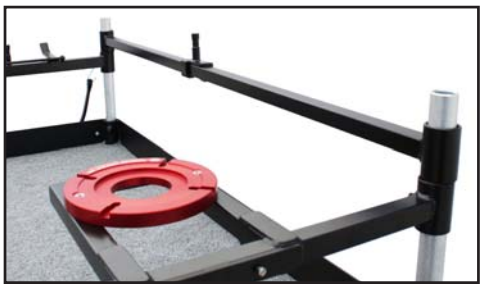
Horizontal Cross Bar with Universal Snap-On Pin

Universal Snap-On 5/8” Baby Pin (SHP)

New Style Support Corner with internal Locking Shoe

Steadi-Cam Stand Holder (MAG-SS ES)

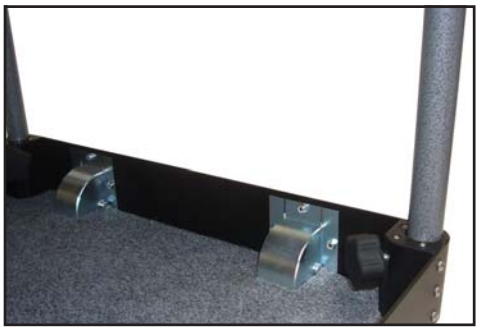

Camera Case Cart (Cont.)

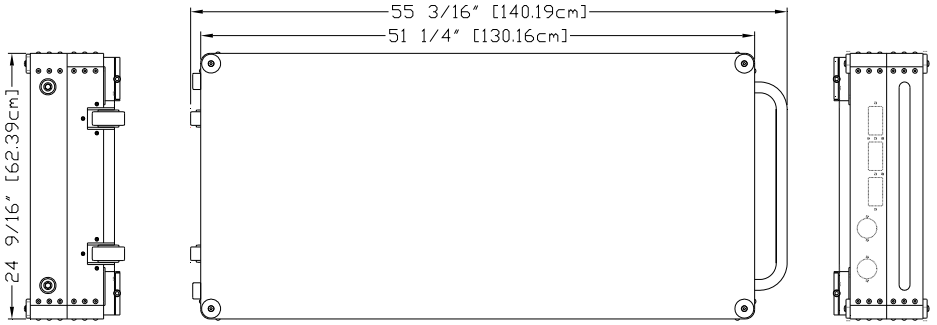

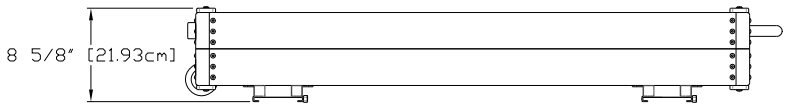

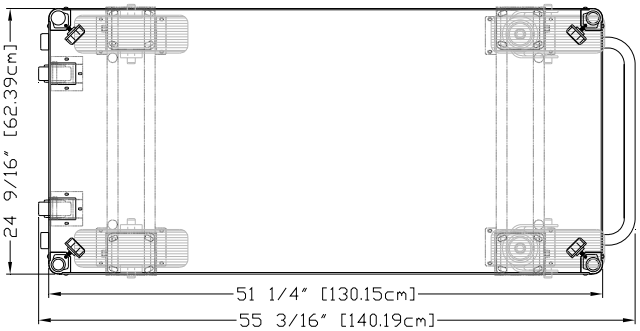

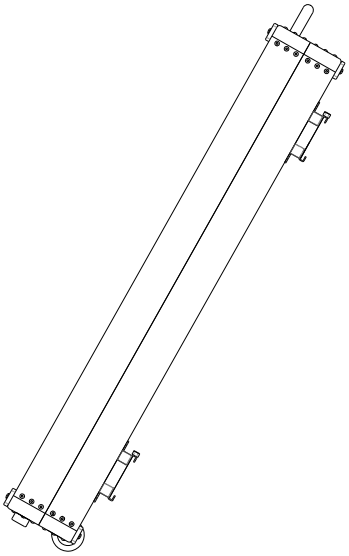

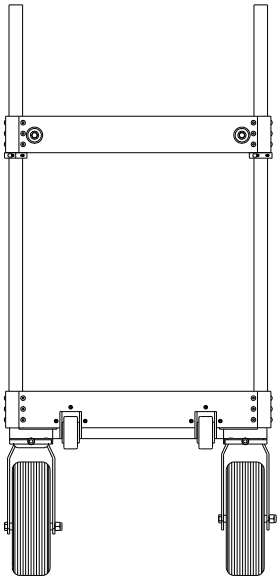

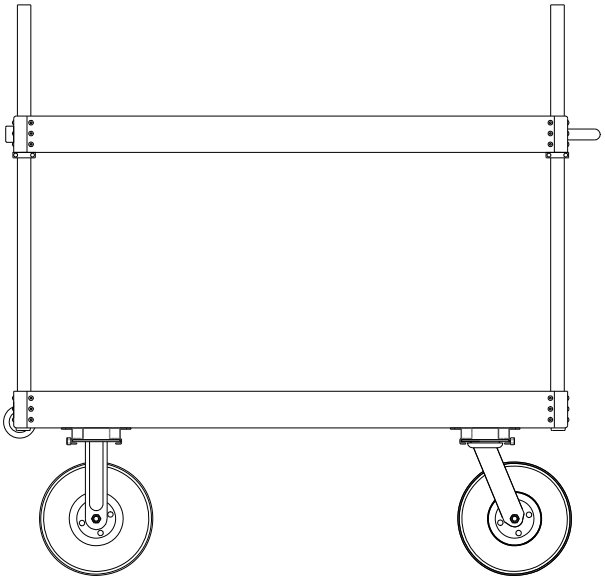

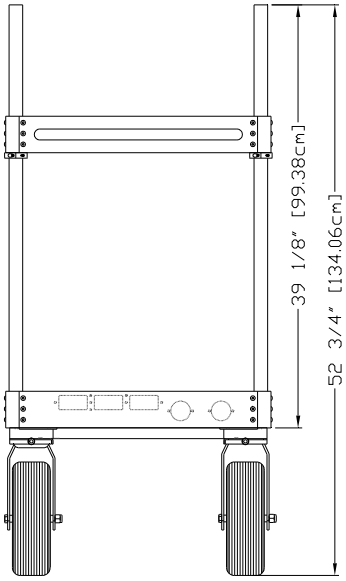

Junior Camera Case Cart (Aluminum)

Part No. TR-04 JR

Sale Price: $ 1,875.00
Material: Aluminum
Color: Black Texture
Max. Capacity: 1,000 lbs. / 454 kgs.
Weight: 96 lbs. / 43.6 kgs.
Dimensions: L39 15/16" x W24 9/16" x H52 3/4"
L101.4cm x W62.4cm x H134cm
(Case ready) L39 15/16" x W24 9/16" x H8 1/16"
(Case ready) L101.4cm x W62.4cm x H22.1cm

TR-04 JR shown with DoveTail Mount and Tripod Holder

Features:
- All aluminum construction
- Adjustable Top Shelf (L35 3/4" x W24 5/16" ID) (L90.1cm x W61.8cm ID)
- Stationary Bottom Shelf (L35 3/4" x W24 5/16" ID) (L90.1cm x W61.8cm ID)
- Full Size Push/Pull Handle
- A.C. Ready
- Wheels: (2) 10" Rigid Caster & (2) 10" Swivel Caster With Brake
- Transformer system, fully collapsible

Accessories:
- Dove Tail Mount w/ Front Box Holder **(TR-04 DT)** $ 250.00
- Mitchell Mount w/ Front Box Holder **(TR-04 M)** $ 270.00
- 100mm Euro Mount w/ Front Box Holder **(TR-04 EU-100)** $ 320.00
- 150mm Euro Mount w/ Front Box Holder **(TR-04 EU-150)** $ 340.00
- Front Box **(MAG-FB)** $ 265.00
- Tripod Holder with Baby Pin (5/8") **(TR-04 TP)** $ 189.00
- Cross Bar with Baby 5/8" Pin **(TR-04 S)** $ 135.00
- Steadi-Cam Riser Unit with Bumper **(TR-04 SPR)** $ 437.00
- Steadi-Cam Vest Holder **(TR-04 SV)** $ 189.00
- Steadi-Cam Stand Holder **(MAG-SS ES)** $ 65.00
- Push Handles (pair) **(TR-04 H)** $ 103.00
- 31" Camera Case Cart Utility Box **(TR-04 JR UB31)** $ 117.00
- Sand Dune Wheel Kit **(TR-04 W)** $ 675.00
- ADP 5/8" Baby Pin **(PIN (ADP))** $ 85.00
- Umbrella Holder (detachable) **(MAG-UH)** $ 103.00
- A.C. with Standard Household Outlets (6) **(TR-04 AC STD)** $ 221.00
- A.C. with Standard Household Outlets (6) and (2) USB Chargers **(TR-04 AC STD USB)** $ 254.00
- A.C. with GFCI Outlets (6) **(TR-04 AC GFCI)** $ 319.00
- A.C. with Spike Protection Outlets (6) **(TR-04 AC SP)** $ 359.00
- 36" Horizontal Cross Bar **(TR-04 SH JR)** $ 146.00 (5/8" Snap-On Pin not included)
- 24" Cross Bar **(TR-04 SH CB)** $ 119.00 (5/8" Snap-On Pin not included)
- Universal Snap-On 5/8" Baby Pin for Cross Bars **(TR-04 SHP)** $ 81.00

The Junior Camera Case Cart is a fully collapsible cart. It is held together by four round posts which attach to the Top and Bottom Shelf's special receiver, shelves are secured with a Hand Prong. All accessories are attached to the posts and secured with the use of a 5/32" Hex Wrench.
Top Shelf is adjustable and can be set at any height. Posts come with a built-in collar to help you set height at your preferred location.
The wheels are detached by sliding them out of a rail unit secured by a 5/32' hex screw and safety button.

Options:
- Foam Filled Tires **(WA-10 FOAM CTR)** $ 196.00
- Middle Shelf **(TR-04 JR A3)** $ 562.00

Replacement parts:
- 10" Pneumatic Tire **(WA-10 TIRE)** $ 23.00
- 10" Pneumatic Tube **(WA-10 TUBE)** $ 8.75
- 10" Pneumatic Rigid Caster Wheel **(W-10 RCX)** $ 59.50
- 10" Pneumatic Swivel Caster Wheel with Brakes **(W-10 SCBRX)** $ 73.00

Shipping Dimensions: L42" x W28" x H15" (135 lbs.) w/Pallet
L106.7cm x W71.1cm x H38.1cm (61.4 kgs.) w/Pallet

TR-04 shown with DoveTail Mount and Mag Front Box

Backstage Equipment, Inc. Toll Free (800) 692-2787 • Tel (818) 504-6026 • Fax (818) 504-6180 • info@backstageweb.com • www.backstageweb.com

Junior Camera Case Cart (Cont.)

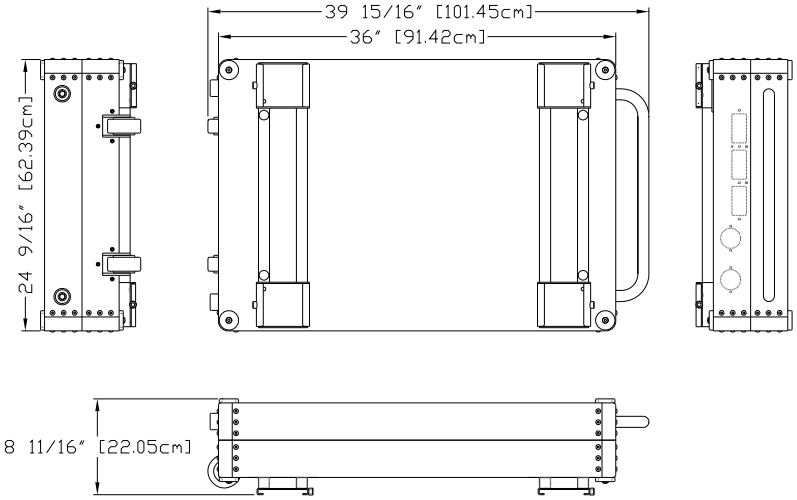

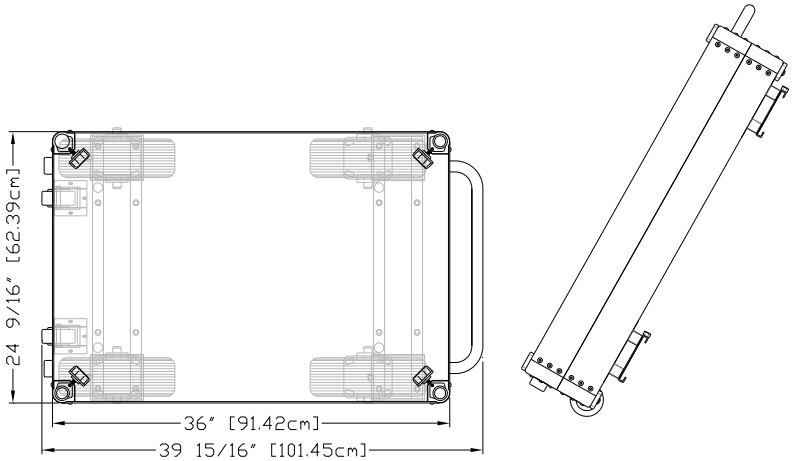

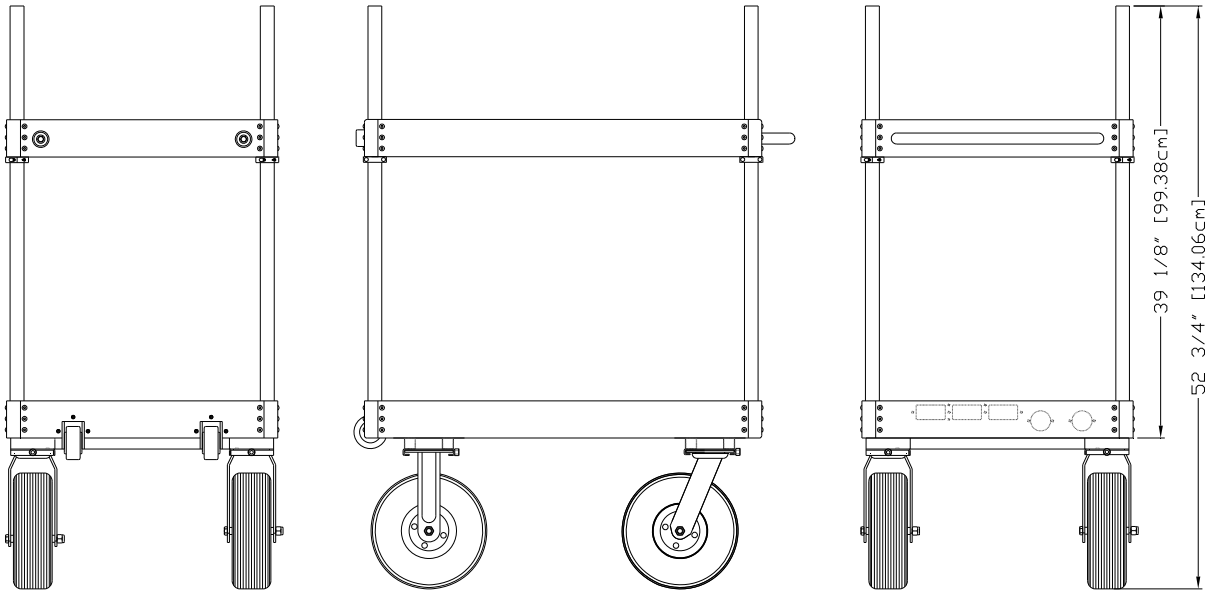

Steadi-Cam Case Cart

Part No. TR-05 EL

Sale Price: $ 2,650.00
Material: Aluminum
Color: Black Texture
Max. Capacity: 1,000 lbs. / 454 kgs.
Weight: 115 lbs. / 52.3 kgs.
Dimensions: L54 5/16" x W26 7/8" x H40 5/8"
L138cm x W68.3cm x H103.2cm
L54 5/16" x W26 7/8" x H7 3/4" (Folded)
L138cm x W68.3cm x H19.7cm

The Steadi-Cam Case Cart is a fully colllapsible cart. The main feature of this cart is the protective front area where your Steadi-Cam unit and Camera is located. Handles are telescopic, they have a dual purpose, one to use to push the cart and the other one is to protect the gear on the sides.

Features:
- 4 UprightAngle Bars (L39") (99cm)
- Top Shelf (L36 1/2" x W25 7/8") (92.7cm x W65.7cm)
- Bottom Shelf (L48 3/4" x W25 7/8") (L123.8cm x W65.7cm)
- Removable Wheels (locking latch device)
- Wheels: 2-10" Rigid & 2-10" Swivel w/ brake
- Steadi-Cam Riser with Bumper (included)
- Telescopic Handles
- Transformer system, fully collapsible
- 5/32" Allen wrench required to dismantle

Accessories:
- Steadi-Cam Vest Holder (TR-05 EL-SV) $ 124.00
- Steadi-Cam Utility Box (TR-05 EL UB35) $ 140.00
- Sand/Dune Wheel Kit (TR-04 W) $ 675.00
- A.C. with Standard Household Outlets (6) **(TR-04 AC STD)** $ 221.00
- A.C. with Standard Household Outlets (6) and (2) USB Chargers **(TR-04 AC STD USB)** $ 254.00
- A.C. with GFCI Outlets (6) **(TR-04 AC GFCI)** $ 319.00
- A.C. with Spike Protection Outlets (6) **(TR-04 AC SP)** $ 359.00

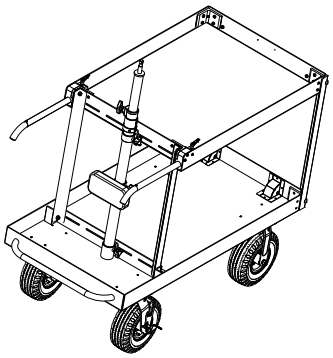

Options:
- Foam Filled Tires **(WA-10 FOAM CTR)** $ 196.00

Replacement parts:
- 10" Pneumatic Tire **(WA-10 TIRE)** $ 23.00
- 10" Pneumatic Tube **(WA-10 TUBE)** $ 8.75
- 10" Pneumatic Rigid Caster Wheel **(W-10 RCX)** $ 59.50
- 10" Pneumatic Swivel Caster Wheel with Brakes **(W-10 SCBRX)** $ 73.00

Shipping Dimensions: L54 5/16" x W26 7/8" x H7 3/4" (150 lbs.) Includes Pallet
L138cm x W68.3cm x H32.4cm (68.2 kgs.)

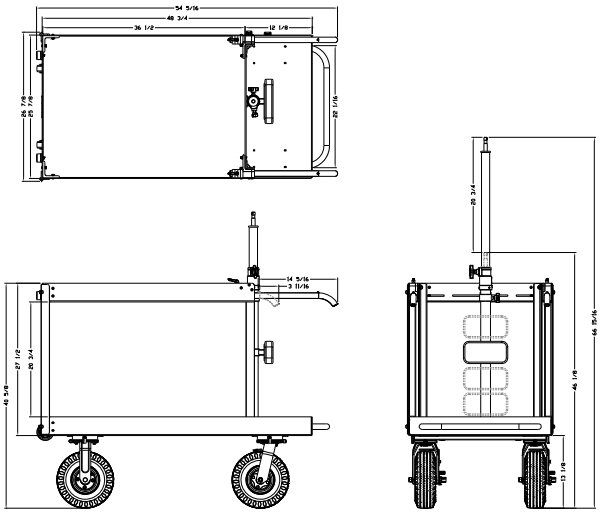

Close up of TR-05 with Handles extended

TR-05 AC with GFCI Outlet (Black) $ 319.00

Mini Flight Case Cart (Aluminum)

Part No. TR-06 MINI

Sale Price: $ 1,825.00
Material: Aluminum
Color: Black Texture
Max. Capacity: 500 lbs. / 227 kgs.
Weight: 46.5 lbs. / 21.2 kgs.
Dimensions: L35 3/4" x W18 1/4" x H38 3/4"
L90.8cm x W46.3cm x H98.4cm
L35 3/4" x W18 1/4" x H5 3/4" (Folded)
L90.8cm x W46.3cm x H14.6cm (Folded)

Features:
- All Aluminum Construction with S tainless Steel Hardware
- Adjustable Top Shelf (2.5" - 31")
- (4) Upright 31" Round Bars (Holds Shelves and Accessories)
- Full size Push/Pull Handle
- Quick Release Foam Filled Wheels with Safety Lock
- Wheels: (2) 6" Rigid Casters & (2) 6" Swivel Casters with Brake
- AC Outlet Ready (Can be installed at later date)
- No tools necessary
- Uses most Magliner accessories
- 8% Lighter than similar models
- Fully collapsible to 5 3/4" height
- Lifetime Warranty

Options:
- Middle Shelf **(TR-06 MINI A3)** $ 575.00
- Flight Case Cart 8" Wheel Kit **(TR-06 W-08)** $ 373.00

Replacement parts:
- 6" Rigid Caster with Foam Filled Tire **(W-06 RCX THIN CF BK)** $ 41.00
- 6" Swivel Caster with Brake and Foam Filled Tire **(W-06 SCBRX THIN CF BK)** $ 43.00
- 31" x 1 1/4" Diam. Vertical Post **(TR-06 MINI A31)** $ 26.00
- 5/16" Comfort Grip **(PRONG-02 CG MINI)** $ 3.00

Shipping Dimensions: L36" x W19" x H7" (54 lbs.)
L91.4cm x W48.3cm x H17.8cm (24.6 kgs.)

Accessories:
- Mini Flight Case Cart Tripod Holder with 5/8" Baby Pin (TR-06 MINI TP) $ 265.00
- Mini Flight Case Cart Mitchell Mount (TR-06 MINI M) $ 313.00
- Mini Flight Case Cart 75mm Ball Mount (TR-06 MINI EU 75) $ 353.00
- Mini Flight Case Cart 100mm Ball Mount (TR-06 MINI EU 100) $ 363.00
- Mini Flight Case Cart 150mm Ball Mount (TR-06 MINI EU 150) $ 383.00
- Mini Flight Case Cart Dove Tail Mount (TR-06 MINI DT) $ 293.00
- Mag Front Box (MAG-FB) $ 265.00
- Mag Front BoxAdapter (MAG-FBA) $ 47.50
- Mini Flight Case Cart Cross Bar with 5/8" Baby Pin (TR-06 MINI S) $ 200.00
- Mag 2-Space Utility Drawer (MAG-L2 PE-15) $ 125.00
- Mini Flight Case Cart 27" Utility Box (TR-06 MINI UB27) $ 125.00
- Mini Flight Case Cart AC with Standard Household Outlets (4) 15A 125 VAC 60Hz (TR-06 MINI AC STD) $ 200.00
- Mini Flight Case Cart AC with Standard Household Outlets (4) 15A 125 VAC 60Hz & (2) USB Chargers (TR-06 MINI AC STD USB) $ 254.00
- Mini Flight Case Cart AC with GFCI Outlets (4) 15A 125 VAC 60Hz (TR-06 MINI AC GFCI) $ 265.00
- Mini Flight Case Cart AC with Spike Protection Outlets (4) 15A 125 VAC 60Hz (TR-06 MINI AC SP) $ 275.00
- Mini Flight Case Cart European AC with Universal CPU Input, Universal Outlets (3) 10A 240 VAC 60Hz (TR-06 MINI AC EU) $ 243.00
- Mini Flight Case Cart European AC with Universal CPU Input, Universal Outlet s (2) 10A 240 VAC 60Hz and (2) USB Chargers (TR-06 MINI AC EU USB) $ 340.00
- Mini Flight Case Cart 32" Monitor Horizontal Cross Bar (TR-06 MINI SH) $ 135.00

Mini Flight Case Cart (Aluminum)

Accessories (Cont.):

- Camera Case Cart Snap-On 5/8” Baby Pin (TR-04 SHP) $ 81.00
- Mag LCD Tilter Head with 75/100mm VESA Adapter Plate (3-24 lbs.) (MAG-LCD TH-LD BK) $ 86.50
- Mag LCD 4" Tilt Head Pin Adapter (MAG-LCD MR-04) $ 52.00
- Mini Flight Case Cart Steadi-Cam Riser Unit (TR-06 MINI SPR) $ 427.00
- Mini Flight Case Cart Steadi-Cam Vest Holder (TR-06 MINI SV) $ 235.00
- Mini Flight Case Cart 16” Keyboard Tray (TR-06 MINI K) $ 103.00
- Mag Mic Boom Grip & Base with Locking System (Large) (MAG-R4 LK-X) $ 92.00
- Mag Mic Boom Grip & Base with Locking System (Small) (MAG-R2 LK-X) $ 86.50
- ADP 5/8” Baby Pin (PIN (ADP)) $ 85.00
- Mag Umbrella (Black, White, Red) (MAG-U) $ 297.00
- Mag Umbrella Holder (MAG-UH) $ 103.00
- Mag 3” Cable Holder (MAG-CH3) $ 21.00
- Mag 6” Cable Holder (MAG-CH6) $ 23.75
- Mag Foldable Cup Holder (MAG-Q CHF) $ 28.00

Wheels and Vertical Poles stored for shipping

* Universal AC Outlets will work in the following countries: United States, Europe, United Kingdom, Australia, New Zealand Japan, Korea and many others.

Vertical Pole Locking System Close-up

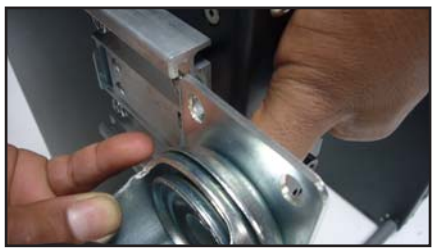

Quick Release Wheels with Safety Lock

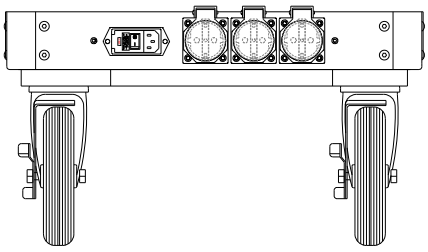

TR-06 MINI with (3) Universal AC Outlets

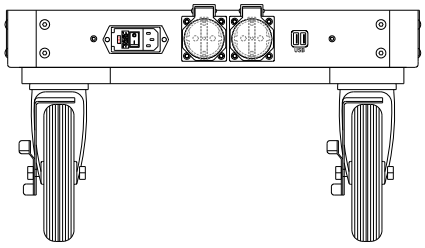

TR-06 MINI with (2) Universal AC Outlets & (2) USB

ADP 5/8” Baby Pin Mounted on Vertical Pole

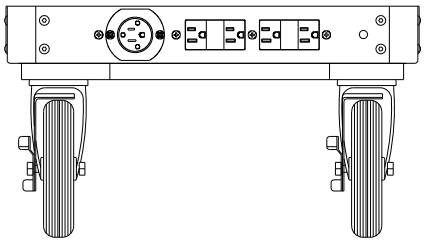

TR-06 MINI with (2) Standard AC Outlets

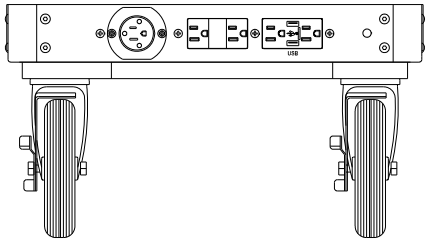

TR-06 MINI with (2) Standard AC Outlets & (2) USB

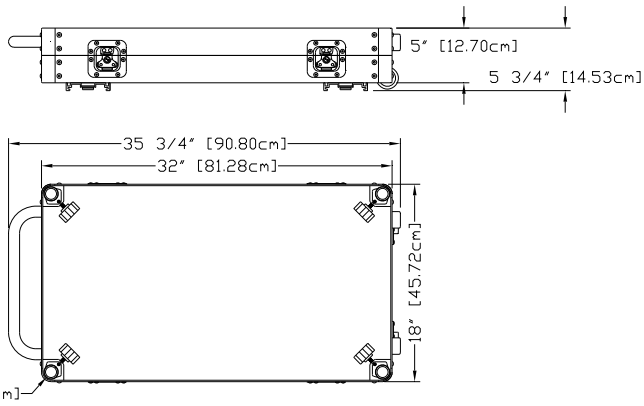

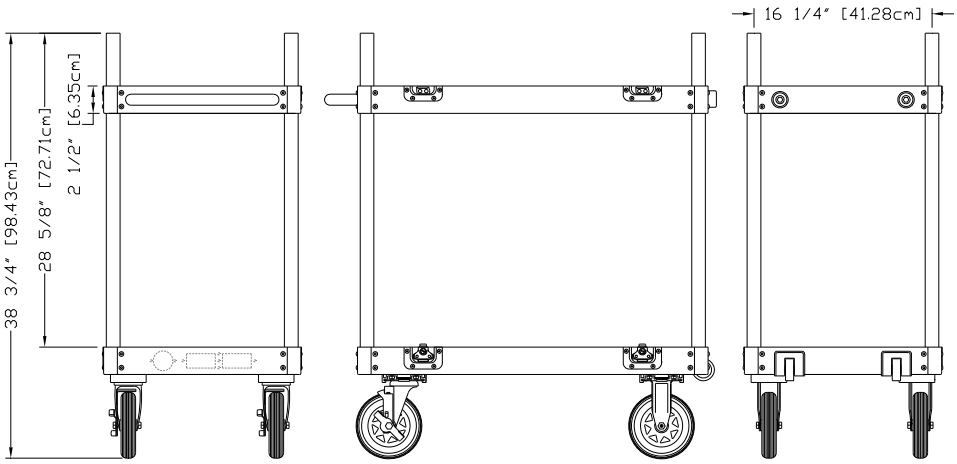

Junior Flight Case Cart (Aluminum)

Part No. TR-06

Sale Price: $ 1,960.00
Material: Aluminum
Color: Black Texture
Max. Capacity: 500 lbs. / 227 kgs.
Weight: 58 lbs. / 26.4 kgs.
Dimensions: L39 3/4" x W24 9/16" x H46 3/4"
L100.2cm x W62.4cm x H118.8cm
L39 3/4" x W24 9/16" x H5 3/4" (Folded)
L100.2 x W62.4cm x H14.6cm (Folded)

Features:
- All Aluminum Construction with Stainless Steel Hardware
- Adjustable Top Shelf (2.5" - 39")
- (4) Upright 39" Round Bars (Holds Shelves and Accessories)
- Full size Push/Pull Handle
- Quick Release Foam Filled Wheels with Safety Lock
- Wheels: (2) 6" Rigid Casters & (2) 6" Swivel Casters with Brake
- AC Outlet Ready (Can be installed at later date)
- No tools necessary
- Uses most Magliner accessories
- 8% Lighter than similar models
- Fully collapsible to 5 3/4" height
- Lifetime Warranty

Options:
- Middle Shelf **(TR-06 A3)** $ 595.00
- Flight Case Cart 8" Wheel Kit **(TR-06 W-08)** $ 373.00

Replacement parts:
- 6" Rigid Caster with Foam Filled Tire **(W-06 RCX THIN CF BK)** $ 41.00
- 6" Swivel Caster with Brake and Foam Filled Tire **(W-06 SCBRX THIN CF BK)** $ 43.00
- 31" x 1 1/4" Diam. Vertical Post **(TR-04 A39)** $ 30.00
- 5/16" Comfort Grip **(PRONG-02 CG MINI)** $ 3.00

Shipping Dimensions: L41" x W19" x H7" (65 lbs.)
L104.1cm x W48.3cm x H17.8cm (29.5 kgs.)

ADP 5/8" Baby Pin
Mounted on Vertical Pole

Accessories:
- Flight Case Cart Tripod Holder with 5/8" Baby Pin (TR-06 TP) $ 275.00
- Flight Case Cart Mitchell Mount (TR-06 M) $ 324.00
- Flight Case Cart 75mm Ball Mount (TR-06 EU 75) $ 364.00
- Flight Case Cart 100mm Ball Mount (TR-06 EU 100) $ 374.00
- Flight Case Cart 150mm Ball Mount (TR-06 EU 150) $ 394.00
- Flight Case Cart Dove Tail Mount (TR-06 DT) $ 304.00
- Mag Front Box (MAG-FB) $ 265.00
- Mag Front Box Adapter (MAG-FBA) $ 47.50
- ADP 5/8" Baby Pin (PIN (ADP)) $ 85.00
- Mag 2-Space Utility Drawer (MAG-L2 PE-15) $ 125.00
- Flight Case Cart 35" Utility Box (TR-06 UB35) $ 130.00
- Flight Case Cart AC with Standard Household Outlets (6) 15A 125 VAC 60Hz (TR-06 AC STD) $ 221.00
- Flight Case Cart AC with Standard Household Outlets (6) 15A 125 VAC 60Hz and (2) USB Chargers (TR-06 AC STD USB) $ 275.00
- Flight Case Cart AC with GFCI Outlets (6) 15A 125 VAC 60Hz (TR-06 AC GFCI) $ 308.00
- Flight Case Cart AC with Spike Protection Outlets (6) 15A 125 VAC 60Hz (TR-06 AC SP) $ 340.00
- Flight Case Cart Euro AC with Univ. CPU Input, Univ. Outlets (3) 10A 240 VAC 60Hz & (2) USB Chargers (TR-06 AC EU UNIV USB) $ 362.00
- Flight Case Cart 36" Monitor Horizontal Cross Bar (TR-06 SH) $ 146.00 (5/8" Snap-On Baby Pin not included)
- Camera Case Cart Snap-On 5/8" Baby Pin (TR-04 SHP) $ 81.00
- Mag LCD Tilter Head with 75/100mm VESA Adapter Plate (3-24 lbs.) (MAG-LCD TH-LD BK) $ 86.50

Junior Flight Case Cart (Aluminum)

Accessories (Cont.):

- Mag LCD 4" Tilt Head Pin Adapter (MAG-LCD MR-04) $ 52.00
- Flight Case Cart Hi/Lo Hat Holder (TR-06 O) $ 259.00
- Flight Case Cart Steadi-Cam Riser Unit (TR-06 SPR) $ 437.00
- Flight Case Cart Steadi-Cam Vest Holder (TR-06 SV) $ 245.00
- Mag Keyboard Tray (MAG-K) $ 103.00
- Mag Mic Boom Grip & Base with Locking System (Large) (MAG-R4 LK-X) $ 92.00
- Mag Mic Boom Grip & Base with Locking System (Small) (MAG-R2 LK-X) $ 86.50
- Mag Umbrella (Black, White, Red) (MAG-U) $ 297.00
- Mag DIT HD Tent (MAG-U HD) $ 1,245.00
- Mag Umbrella Holder (MAG-UH) $ 103.00
- Mag 3” Cable Holder (MAG-CH3) $ 21.00
- Mag 6” Cable Holder (MAG-CH6) $ 23.75
- Mag Foldable Cup Holder (MAG-Q CHF) $ 28.00

Wheels and Vertical Poles stored for shipping

Vertical Pole Locking System Close-up

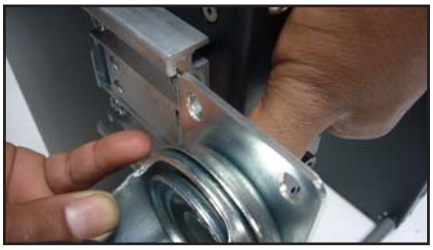

Quick Release Wheels with Safety Lock

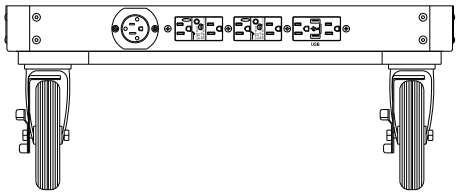

TR-06 with (6) Standard AC Outlets and (2) USB

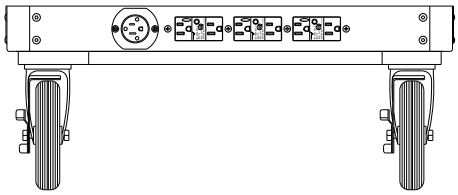

TR-06 with (6) Spike Protection AC Outlets

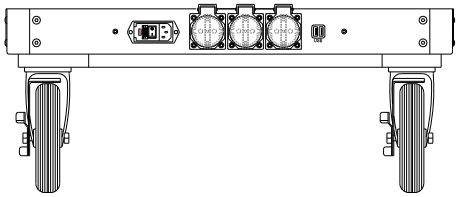

TR-06 with (3) *Universal AC Outlets and (2) USB

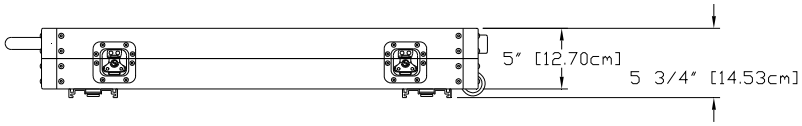

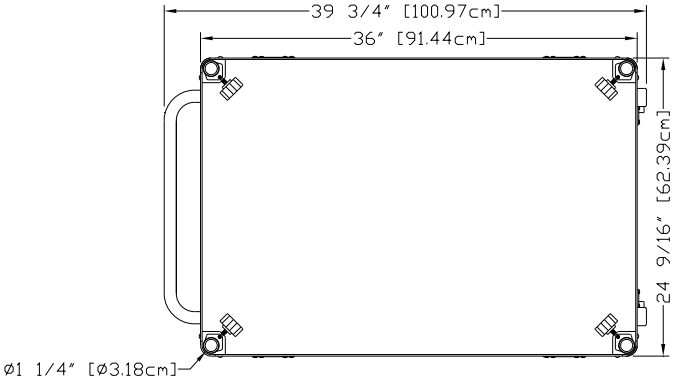

* Universal AC Outlets will work in the following countries:
United States
Europe
United Kingdom
Australia
New Zealand
Japan
Korea
and many others.

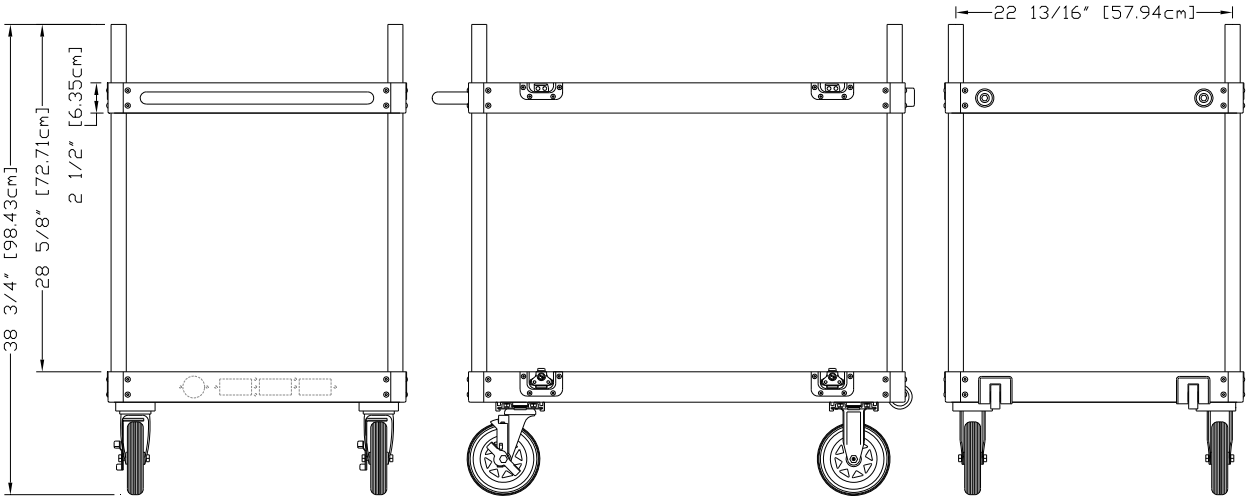

Backstage Equipment, Inc. Toll Free (800) 692-2787 • Tel (818) 504-6026 • Fax (818) 504-6180 • info@backstageweb.com • www.backstageweb.com

Flight Case Cart

Part No. TR-08

Sale Price: $ 1,275.00
Material: Plywood, Steel and Aluminum
Color: Gray
Max. Capacity: 800 lbs. / 364 kgs.
Weight: 82 lbs. / 37.3 kgs.
Dimensions: L37 3/8" x W25 3/8" x H38 3/8"
L94.9cm x W64.5cm x H97.5cm
L37 3/8" x W25 3/8" x H7 13/16" (Folded)
L94.9cm x W64.5cm x H19.8cm (Folded)

Features:
- Heavy Duty construction
- Quick Release Wheels with Safety Lock
- Wheels: (2) 8" Swivel Caster with Brake, (2) 8" Rigid Caster
- Fully collapsible

Accessories:
- Sand/Dune Wheel Kit **(TR-04 W)** $ 675.00

Options:
Foam Filled Tires **(WA-08 FOAM CTR)** $ 172.00

Replacement parts:
- 8" Pneumatic Tire **(WA-08 TIRE)** $ 18.00
- 8" Pneumatic Tube **(WA-08 TUBE)** $ 8.00
- 8" Pneumatic Swivel Caster Wheel **(W-08 SCBRX)** $ 53.50
- 8" Pneumatic Rigid Caster Wheel **(W-08 RCX)** $ 48.00

The Flight Case Camera Cart was designed specifically for the camera assist ant on the go. Because it is built as a flight case, your cart and items inside will be protected at all times when travelling. The cart has a carrying handle and two caster wheels located in the rear for ease of transportation. It fits comfortably into any storage sp ace or car 's trunk. The Flight Case Cart is held together by (4) aluminum angles which lock into each of the case's corners by using a 3/16" Hex wrench. Top cover becomes a top shelf when flipped over.

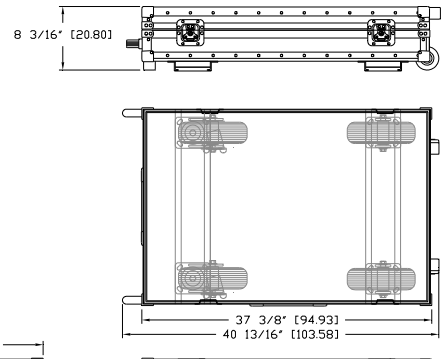

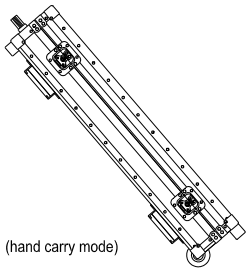

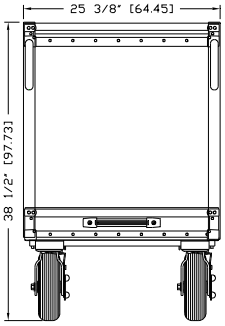

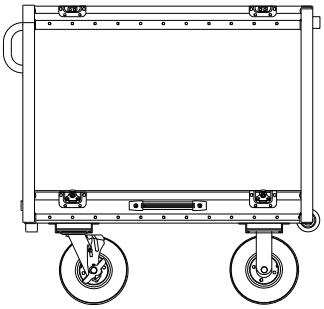

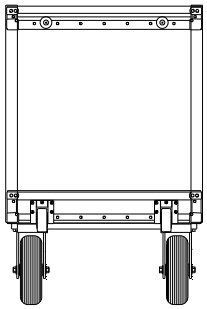

Rubbermaid Carts

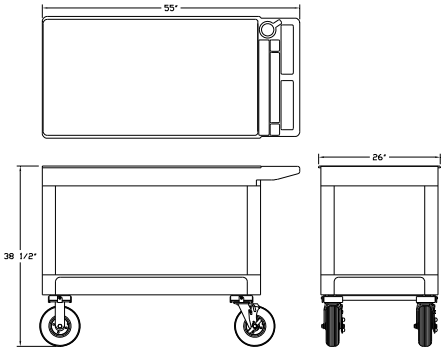

RUB-03 8

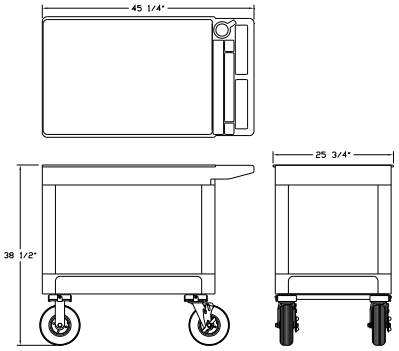

RUB-01 8

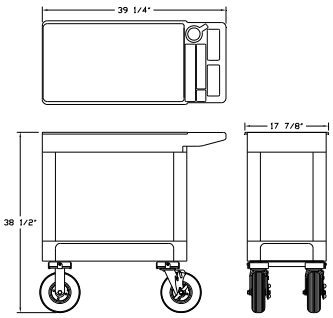

RUB-02 8

Rubbermaid Camera Cart

Style No. RUB-03 8

This is the latest and largest model from Rubbermaid. It's 10 inches longer than the standard Rubbermaid Camera Cart. It can be outfitted with an 8" or 10" Wheel Conv. Kit.
The wheels are detached by sliding them out of a rail secured with a locking latch.

- Collapsible
- Molded in Cup Holder
- 750 lb. capacity
- Braking system
- Wheels: (2) 8" Rigid & (2) 8" Swivel w/ Brakes
- Removable wheels with safety lock
- Optional 8" Foam Filled Tires $ 172.00
- Optional 10" Foam Filled Tires $ 196.00

L55" x W26" x H38 1/2" 80 lbs.
L139.7cm x W66cm x H97.8cm 36.4 kgs.
Sale Price $ 945.00

Style No. RUB-03 10
L55" x W26" x H40 1/2" 88 lbs.
L139.7cm x W66cm x H102.9cm 40 kgs.
Sale Price $ 995.00

Optional equipment for all Rubbermaids
- Universal Accessory Adapter $ 157.00
- Umbrella Holder $ 103.00
- Umbrella $ 297.00 (Canvas: Red, White, Black)
- Tripod Holder with 5/8" Baby Pin $ 167.00
- Universal 5/8" Baby Pin (Center) $ 81.00
- Sand/Dune Wheel Kit $ 675.00
- 8" Wheel Conversion Kit $ 485.00
- 10" Wheel Conversion Kit $ 545.00
- Full Extension Drawer $ 195.00
- 3-Outlet Surge Protected Pwr. Strip $ 115.00
- Cable Hook $ 26.00

Note: Rubbermaid Universal Accessory (RUB-UA) required to install Tripod Holder, Umbrella Holder & Universal 5/8" Baby Pin.

Rubbermaid Camera Cart

Style No. RUB-01 8

The Rubbermaid Camera Cart is outfitted with an 8" Wheel Conversion Kit.
The wheels are detached by sliding them out of a rail secured with a locking latch.

- Collapsible
- Molded in Cup Holder
- 500 lb. capacity
- Braking system
- Wheels: (2) 8" Rigid & (2) 8" Swivel w/ Brakes
- Removable wheels with safety lock
- Optional 8" Foam Filled Tires **(WA-08 FOAM CTR)** $ 172.00
- Optional 10" Foam Filled Tires **(WA-10 FOAM CTR)** $ 196.00

L45 1/4" x W25 3/4" x H38 1/2" 75 lbs.
L116cm x W65.4cm x H97.8cm 34.1 kgs.
Sale Price $ 735.00

Style No. RUB-01 10
L45 1/4" x W25 3/4" x H40 1/2" 83 lbs.
L115cm x W65.4cm x H103cm 37.7 kgs.
Sale Price $ 785.00

- Umbrella $ 297.00 (Includes hardware and canvas)

Canvas available in Red, White and Black.

RUB-01 (Stock) Sale Price $ 285.00
L45 1/8" x W25 3/4" x H33 1/4" 40 lbs.
L114.6cm x W65.4cm x H84.5cm 18.2 kgs.
RUB-02 (Stock) Sale Price $ 250.00
L39 1/4" x W17 7/8" x H33 1/4" 27 lbs.
L99.7cm x W45.4cm x H84.5cm 12.3 kgs.
RUB-03 (Stock) Sale Price $ 495.00
L55" x W26" x H33 1/4" 48 lbs.
L139.7cm x W66cm x H84.5cm 21.8 kgs.

Small Rubbermaid Camera Cart

Style No. RUB-02 8

Same as the RUB-01 8 model but smaller
Uses same wheels and optional equipment.

- Collapsible
- Braking system
- Wheels: (2) 8" Rigid & (2) 8" Swivel w/ Brakes
- Removable Wheels with Safety Lock
- 8" Wheel Conversion Kit $ 435.00
- Optional Foam Filled Tires **(W-08 FOAM CTR)** $ 172.00

L39 1/4" x W17 7/8" x H38 1/2" 62 lbs.
L99.7cm x W45.4cm x H97.8cm 28.2 kgs.

Sale Price $ 665.00

TR-01 Transformer Cart

Part No. TR-01

Sale Price: $ 1,165.00
Material: Steel
Color: Black
Max. Capacity: 500 lbs. / 227 kgs.
Weight: 58 lbs. / 26.4 kgs.
Dimensions: D33" x W29 1/2" x H44 1/2"
L83.8cm x W75cm x H111.3cm

TR-01 Cart shown with optional 9" Monitor Trays (VA-01), 4-Space Sliding Drawer with lock (MAG-L4), Umbrella (MAG-U), Umbrella Holder (MAG-UH), and Cross Bar with 5/8" Baby Pin (TR-01 S-CB).

The Transformer Cart is a fully collapsible cart used for Video, Sound and Remote Head. It is held together by four vertical posts which attach to a Bottom, Middle and Top Shelf by using telescopic locks operated with a 5/32 Allen wrench. All accessories are attached in the same manner. Middle Shelf, Handles, Rack Mounts and all available accessories can be adjusted to your desired height.
Additional Rack Mounts may be installed on rear section of cart for additional accessories.
Custom size vertical poles may be ordered to change height of cart.

Features:
- Top Shelf (D22" x W22" x H1" ID) (56cm x W56cm x H2.5cm ID)
- Middle Shelf (Adjustable) (D19 1/4" x W20" x H1" ID) (L49cm x W51cm x H2.5cm ID)
- Bottom Shelf (D19 1/4" x W20" x H1" ID) (L50cm x W51cm x H2.5cm ID)
- (2) Front Vertical Posts (L1 x W1" x H28") (L2.5cm x W2.5cm x H71.1cm")
- (2) Rear Vertical Posts (L1 x W1" x H36") (L2.5cm x W2.5cm x H91.4cm")
- (2) 5/8" Baby Pins accomodate Monitors, Monitor Trays and accessories
- (2) 19" Adjustable Rack Mounts (length 24 3/4") accomodate (14) Rack Mount spaces
  Note: Rack Mount space equals 1 3/4"
- (2) Handles with Cable Hooks
- (2) 5/8" Diameter Adjustable Axles
- Wheels: (2) 5" Thermal Swivel Casters with Brake & (2) 16" Pneumatic Cable Crawlers
- Transformer system, fully collapsible

Accessories:
- Nagra Sound Tray **(TR-01 N)** $ 189.00
- Loading Wheel Kit **(TR-01 LX)** $ 167.00
- 3" Cable Hook **(TR-01 CH3)** $ 26.00
- 6" Cable Hook **(TR-01 CH6)** $ 28.00
- VPB 5/8" Baby Pin **(TR-01 S)** $ 35.00 (Mounts on top of Vertical Poles)
- VPB 5/8" Baby Pin (Left) **(TR-01 S-L)** $ 52.00
- VPB 5/8" Baby Pin (Right) **(TR-01 S-R)** $ 52.00
- VPB Snap-On 5/8" Baby Pin **(TR-01 S-SO)** $ 81.00 (See CAD drawing below)
  (Same as TR-01 S-L and TR-01 S-R, but can be installed without taking cart apart)
- VPB 5/8" Baby Pin (Left) Set at 45 degrees **(TR-01 S-L 45)** $ 60.00
- VPB 5/8" Baby Pin (Right) Set at 45 degrees **(TR-01 S-R 45)** $ 60.00
- Mic Boom Grip & Base **(MAG-R2)** $ 37.00
- Mic Boom Grip & Base **(MAG-R4)** $ 39.00
- Drawer (2-space) latch & lock **(MAG-L2 PE-15)** $ 125.00
- Drawer (3-space) latch & lock **(MAG-L3 PE-15)** $ 135.00
- Drawer (4-space) latch & lock **(MAG-L4 PE-15)** $ 145.00
- Sliding Shelf with lock (1-space) **(TR-01 SS)** $ 232.00
- Sliding Shelf (2-space) **(TR-01 SS PE2)** $ 146.00
- Small K/B Slide Tray **(TR-01 KBSS)** $ 330.00
- Lap Top Drawer with Lock **(TR-01 LTD PE)** $ 124.00
- 9-Outlet Rack Power Strip **(TR-01 PD9)** $ 173.00
- 24" Rack Mount Set **(TR-01 R24X)** $ 86.50
- Umbrella **(MAG-U)** $ 297.00 (Canvas: White, Red, Black)
- Umbrella Holder **(MAG-UH)** $ 103.00
- VPB Cross Bar with 5/8" Baby Pin **(TR-01 S-CB)** $ 125.00
- Rain Tent Umbrella w/ Skirts **(MAG-U RT)** $ 1,325.00
- HD DIT Tent **(MAG-U HD)** $ 1,245.00

TR-01 SS Sliding Shelf (1-Space) $ 232.00

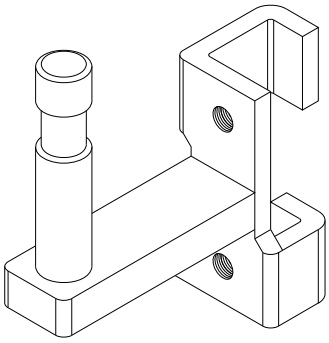

TR-01 S-SO VPB Snap-On 5/8" Baby Pin $ 81.00

MAG-L3 PE-15 Sliding Drawer w/ Lock & Latch (3-space) $ 135.00

TR-01 Transformer Cart (Cont.)

Accessories (Cont.):
- 9" Monitor Tray **(VA-01)** $ 175.00
- 13" Monitor Tray **(VA-02)** $ 185.00
- VPB Vertical Baby Riser (Adjustable) **(TR-01 VPR)** $ 251.00 (Includes one of each: MAG-LCD TH-LD BK, MAG-LCD MR-04, MAG-01 VPR-B ST, TR-01 Z)
- Mag LCD Tilter Head with 75/100mm VESA Plate (3-24 lbs.) **(MAG-LCD TH-LD BK)** $ 86.50
- Mag LCD Tilter Head with 75/100mm VESA Plate (20-35 lbs.) **(MAG-LCD TH-MD BK)** $ 119.00
- Mag LCD 4" Tilt Head Pin Adapter **(MAG-LCD MR-04)** $ 52.00
- Mag Baby Pin Riser **(MAG-01 VPR-B ST)** $ 73.50
- VPB Adapter to Mag Baby Pin Riser **(TR-01 Z)** $ 39.00

Options:
- 20" Knobby BMX Wheel Set (5/8 Bore) **(W-20 58X)** $ 162.00
- VPB 20" Wheel Axle Set **(TR-01 D20-X)** $ 90.75

Replacement parts:
- 5" Thermal Swivel Caster with Brake **(W-05 SCBRX)** $ 23.00
- 16" Pneumatic Wheel with 5/8" Bearings **(W-16 CC58X)** $ 120.00
- 16" Pneumatic Tire **(WA-16 CC TIRE)** $ 23.00
- 16" Pneumatic Tube **(WA-16 CC TUBE)** $ 9.75
- 5/8" Sealed Bearing **(WA-58 BR)** $ 2.75 (2) needed per wheel)

Shipping Dimensions: L26" x W26" x H26" (71 lbs.) & L5" x W5" x H45" (11 lbs.)
L66cm x W66cm x H66cm (32.3 kgs.) &
L12.7cm x W12.7cm x H114.3cm (5 kgs.)

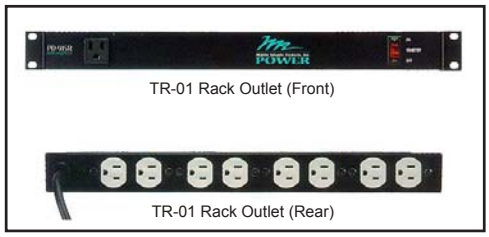

TR-01 PD9 9-Outlet Rackable Mount Power Strip (1-Space)

NOTE: 1-Space equals 1 3/4 inches

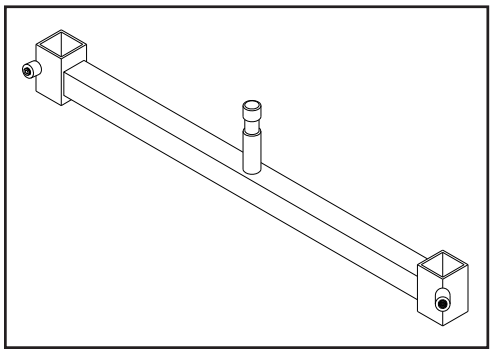
TR-01 S-CB Cross Bar with 5/8" Baby Pin $ 125.00

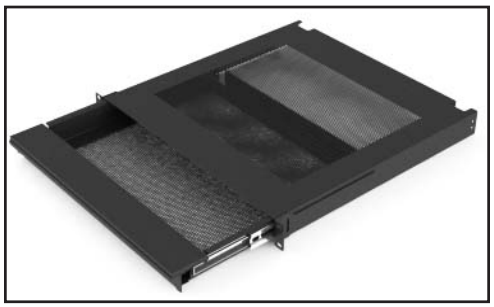
TR-01 LTD PE LapTop Drawer with Lock (1-Space) $ 124.00

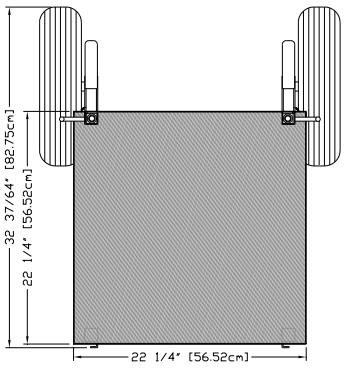

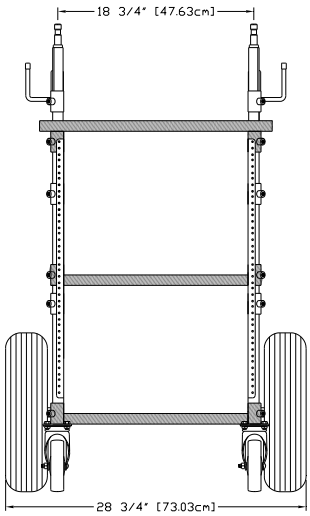

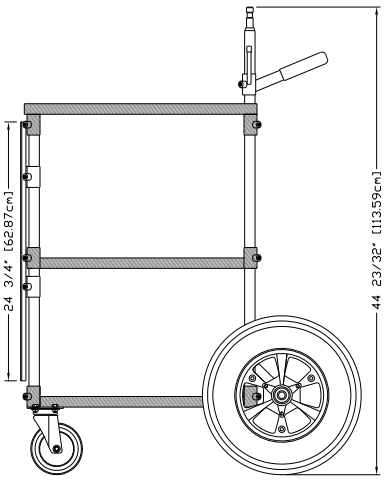

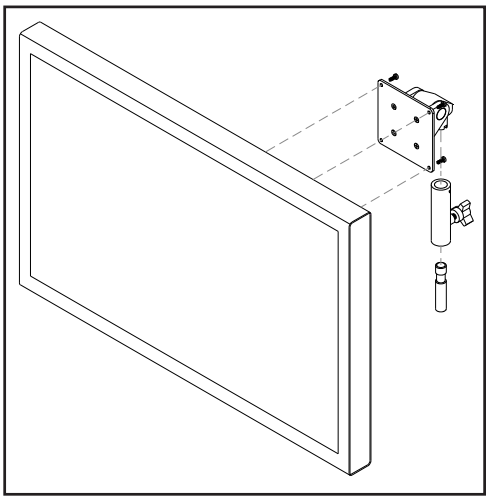
MAG-LCD TH-LD BK with MAG-LCD MR-04 docked on 5/8" Baby Pin

TR-01 8 Transformer Cart

Part No. TR-01 8

Sale Price: $ 1,345.00
Material: Steel
Color: Black
Max. Capacity: 800 lbs. / 227 kgs.
Weight: 68 lbs. / 31 kgs.
Dimensions: D33" x W29 1/2" x H48"
L83.8cm x W75cm x H122cm

The Transformer Cart is a fully collapsible cart used for Video, Sound and Remote Head. It is held together by four vertical posts which attach to a Bottom, Middle and Top Shelf by using telescopic locks operated with a 5/32 Allen wrench. All accessories are attached in the same manner. Middle Shelf, Handles, Rack Mounts and all available accessories can be adjusted to your desired height.
Additional Rack Mounts may be installed on rear section of cart for additional accessories.
Custom size vertical poles may be ordered to change height of cart.

TR-01 8 Transformer Cart with optional Nagra Sound Tray (TR-01 N) and 4-Space Sliding Drawer with lock. (MAG-L4)

Features:
- Top Shelf (D22" x W22" x H1" ID) (56cm x W56cm x H2.5cm ID)
- Middle Shelf (Adjustable) (D19 1/4" x W20" x H1" ID) (L49cm x W51cm x H2.5cm ID)
- Bottom Shelf (D19 1/4" x W20" x H1" ID) (L50cm x W51cm x H2.5cm ID)
- (2) Front Vertical Posts (L1" x W1" x H28") (L2.5cm x W2.5cm x H71.1cm")
- (2) Rear Vertical Posts (L1" x W1" x H39") (L2.5cm x W2.5cm x H99cm")
- (2) 5/8" Baby Pins accomodate Monitors, Monitor Trays and accessories
- (2) 19" Adjustable Rack Mounts (length 24 3/4") accomodate (14) Rack Mount spaces
  Note: 1 Rack Mount space equals 1 3/4"
- (2) Handles with Cable Hooks
- (2) 5/8" Diameter Adjustable Axle Brackets outfitted with Sand/Dune Wheel Axle Receivers
- Wheels: (2) 8" Pneumatic Swivel Casters with Brake & (2) 16" Pneumatic Cable Crawlers
- Transformer system, fully collapsible

Accessories:
- Nagra Sound Tray **(TR-01 N)** $ 189.00
- Loading Wheel Kit **(TR-01 LX)** $ 167.00
- 3" Cable Hook **(TR-01 CH3)** $ 26.00
- 6" Cable Hook **(TR-01 CH6)** $ 28.00
- VPB Trans 5/8" Baby Pin **(TR-01 S)** $ 35.00
- VPB 5/8" Baby Pin (Left) **(TR-01 S-L)** $ 52.00
- VPB 5/8" Baby Pin (Right) **(TR-01 S-R)** $ 52.00
- VPB Snap-On 5/8" Baby Pin **(TR-01 S-SO)** $ 81.00
  (See CAD drawing on page 115)
  (Same as TR-01 S-L and TR-01 S-R, but can be installed without taking cart apart)
- VPB 5/8" Baby Pin (Left) Set at 45 degrees **(TR-01 S-L 45)** $ 60.00
- VPB 5/8" Baby Pin (Right) Set at 45 degrees **(TR-01 S-R 45)** $ 60.00
- Mic Boom Grip & Base **(MAG-R2)** $ 37.00
- Mic Boom Grip & Base **(MAG-R4)** $ 39.00
- Drawer (2-space) latch & lock **(MAG-L2 PE-15)** $ 125.00
- Drawer (3-space) latch & lock **(MAG-L3 PE-15)** $ 135.00
- Drawer (4-space) latch & lock **(MAG-L4 PE-15)** $ 145.00
- Sliding Shelf with lock (1-space) **(TR-01 SS)** $ 232.00
- Sliding Shelf (2-space) **(TR-01 SS PE2)** $ 146.00
- Small K/B Slide Tray **(TR-01 KBSS)** $ 330.00
- Lap Top Drawer with Lock **(TR-01 LTD PE)** $ 124.00
- 9-Outlet Rack Power Strip **(TR-01 PD9)** $ 173.00
- 24" Rack Mount (Set) **(TR-01 R24X)** $ 86.50
- Umbrella **(MAG-U)** $ 297.00 (Canvas: White, Red, Black)
- Umbrella Holder **(MAG-UH)** $ 103.00
- VPB Cross Bar with 5/8" Baby Pin **(TR-01 S-CB)** $ 125.00
- Rain Tent Umbrella w/ Skirts **(MAG-U RT)** $ 1,325.00
- HD DIT Tent **(MAG-U HD)** $ 1,245.00

TR-01 8 Transformer Cart in loading position with optional Loading Wheel Kit (TR-01 LX), Nagra Sound Tray (TR-01 N) and 4-Space Sliding Drawer with lock. (MAG-L4)

TR-01 8 Transformer Cart (Cont.)

Accessories (Cont.):
- 9” Monitor Tray **(VA-01)** $ 175.00
- 13” Monitor Tray **(VA-02)** $ 185.00
- VPB Vertical Baby Riser (Adjustable) **(TR-01 VPR)** $ 251.00 (Includes one of each: MAG-LCD TH-LD BK, MAG-LCD MR-04, MAG-01 VPR-B ST, TR-01 Z)
- Mag LCD Tilter Head with 75/100mm VESA Plate (3-24 lbs.) **(MAG-LCD TH-LD BK)** $ 86.50
- Mag LCD Tilter Head with 75/100mm VESA Plate (20-35 lbs.) **(MAG-LCD TH-MD BK)** $ 119.00
- Mag LCD 4" Tilt Head Pin Adapter **(MAG-LCD MR-04)** $ 52.00
- Mag Baby Pin Riser **(MAG-01 VPR-B ST)** $ 73.50
- VPB Adapter to Mag Baby Pin Riser **(TR-01 Z)** $ 39.00

Options:
- 20" Knobby BMX Wheel Set (5/8 Bore) **(W-20 58X)** $ 162.00
- VPB 20" Wheel Axle Set **(TR-01 D20-X)** $ 90.75

Replacement parts:
- 8" Pneumatic Swivel Caster Wheel with Brake **(W-08 SCBRX)** $ 53.50
- 16” Pneumatic Wheel with 5/8” Bearings **(W-16 CC58X)** $ 120.00
- 16” Pneumatic Tire **(WA-16 CC TIRE)** $ 23.00
- 16” Pneumatic Tube **(WA-16 CC TUBE)** $ 9.75
- 5/8” Sealed Bearing **(WA-58 BR)** $ 2.75 (2) needed per wheel)

Shipping Dimensions: L26” x W26” x H26” (80 lbs.) & L5” x W5” x H45” (11 lbs.)
L66cm x W66cm x H66cm (36.4 kgs.) &
L12.7cm x W12.7cm x H114.3cm (5 kgs.)

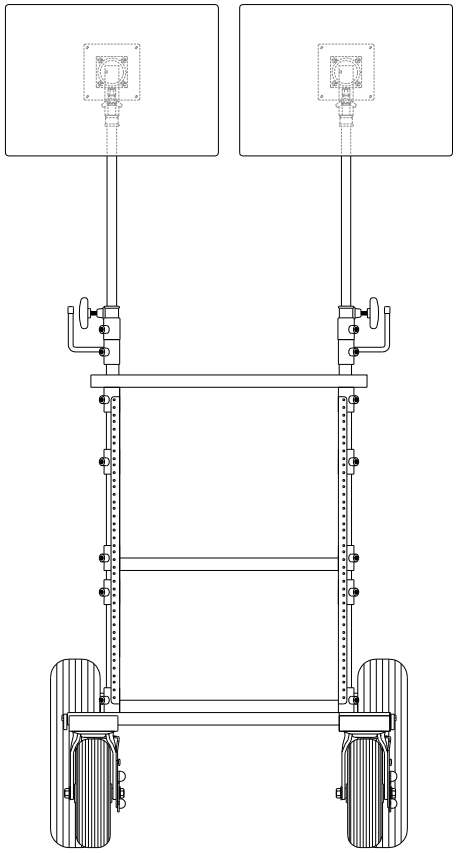

TR-01 8 shown with (2) TR-01 VPR units, includes the following accessories:
(MAG-LCD TH-LD BK) Mag LCD Tilter Head with 75/100mm VESA Adapter Plate (3-24 lbs.) (2)
(MAG-LCD MR-04) Mag LCD 4” Tilt /Head Pin to 5/8” Baby Pin Adapter. (2)
(MAG-01 VPR-B ST) Mag Baby Pin Extension Riser (Steel) (2)
(TR-01 Z) VPB Adapter to Mag Baby Pin Riser (2)

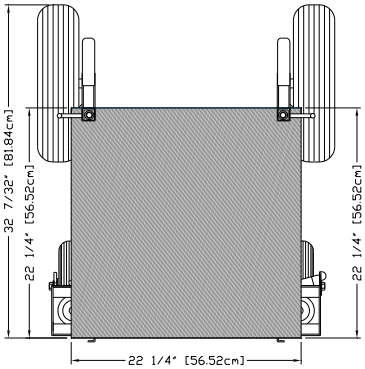

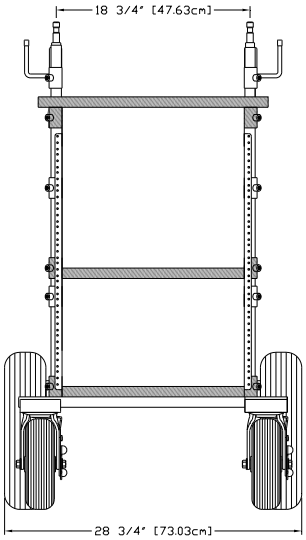

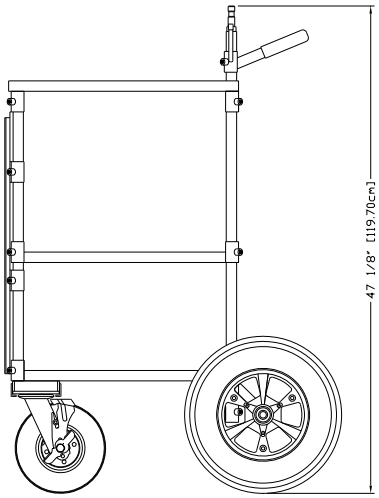

TR-01-8 Cart shown with optional Sand/Dune Wheel Kit (TR-01 8-W)

Backstage Equipment, Inc. Toll Free (800) 692-2787 • Tel (818) 504-6026 • Fax (818) 504-6180 • info@backstageweb.com • www.backstageweb.com

TR-01 EFX Transformer Cart

Part No. TR-01 EFX

Sale Price: $ 1,245.00
Material: Steel
Color: Black
Max. Capacity: 500 lbs. / 227 kgs.
Weight: 65 lbs. / 29.6 kgs.
Dimensions: D33" x W29 1/2" x H44 1/2"
L83.8cm x W75cm x H113cm

TR-01 EFX shown with optional Sliding K/B & Mouse Tray, Nagra Tray, Sliding Shelf, 3-Space Sliding Drawer w/ lock & 9-Outlet Power Strip

Same as the TR-01 Transformer Cart but with the ability to install an optional Sliding K/B & Mouse Tray.
Cart is held together by four vertical posts which attach to a Bottom, Middle and Top Shelf by using telescopic locks operated with a 5/32 Allen wrench. All accessories are attached in the same manner. Middle Shelf, Handles, Rack Mounts and all available accessories can be adjusted to your desired height.
Additional Rack Mounts may be installed on rear section of cart for additional accessories.
Custom size vertical poles may be ordered to change height of cart.

Features:
- Top Shelf (D22" x W22" x H1") (56cm x W56cm x H2.5cm)
- Middle Shelf (Adjustable) (D19 1/2" x W22" x H1") (L50cm x W56cm x H2.5cm)
- Bottom Shelf (D19 1/2" x W20" x H1") (L50cm x W51cm x H2.5cm)
- (2) Front Vertical Posts (L1 x W1" x H28") (L2.5cm x W2.5cm x H71.1cm")
- (2) Rear Vertical Posts (L1 x W1" x H36") (L2.5cm x W2.5cm x H99cm")
- (2) 5/8" Baby Pins accomodate Monitors, Monitor Trays and accessories
- (2) 19" Adjustable Rack Mounts (length 24 3/4") accomodate (14) Rack Mount spaces (1 Rack Mount space equals 1 3/4")
- (2) Handles with Cable Hooks
- (2) 5/8" Diameter Adjustable Axles
- Wheels: (2) 5" Thermal Swivel Casters with Brake & (2) 16" Pneumatic Cable Crawlers
- Transformer system, fully collapsible

Accessories:
- Loading Wheel Kit **(TR-01 LX)** $ 167.00
- 3" Cable Hook **(TR-01 CH3)** $ 26.00
- 6" Cable Hook **(TR-01 CH6)** $ 28.00
- VPB Trans 5/8" Baby Pin **(TR-01 S)** $ 35.00
- VPB 5/8" Baby Pin (Left) **(TR-01 S-L)** $ 52.00
- VPB 5/8" Baby Pin (Right) **(TR-01 S-R)** $ 52.00
- VPB Snap-On 5/8" Baby Pin **(TR-01 S-SO)** $ 81.00
  (See CAD drawing on page 115) **(Same as TR-01 S-L and TR-01 S-R, but can be installed without taking cart apart)**
- VPB 5/8" Baby Pin (Left) Set at 45 degrees **(TR-01 S-L 45)** $ 60.00
- VPB 5/8" Baby Pin (Right) Set at 45 degrees **(TR-01 S-R 45)** $ 60.00
- Mic Boom Grip & Base **(MAG-R2)** $ 37.00
- Mic Boom Grip & Base **(MAG-R4)** $ 39.00
- Drawer (2-space) latch & lock **(MAG-L2 PE-15)** $ 125.00
- Drawer (3-space) latch & lock **(MAG-L3 PE-15)** $ 135.00
- Drawer (4-space) latch & lock **(MAG-L4 PE-15)** $ 145.00
- Sliding Shelf with lock (1-space) **(TR-01 SS)** $ 232.00
- Sliding Shelf (2-space) **(TR-01 SS PE2)** $ 146.00
- Small K/B Slide Tray **(TR-01 KBSS)** $ 330.00
- K/B Mouse Slide Tray **(TR-01 MDKB)** $ 232.00
- Lap Top Drawer with Lock **(TR-01 LTD PE)** $ 124.00
- 9-Outlet Rack Power Strip **(TR-01 PD9)** $ 173.00
- 24" Rack Mount (Set) **(TR-01 R24X)** $ 86.50
- Umbrella **(MAG-U)** $ 297.00 (Canvas: White, Red, Black)
- Umbrella Holder **(MAG-UH)** $ 103.00
- VPB Cross Bar with 5/8" Baby Pin **(TR-01 S-CB)** $ 125.00
- Rain Tent Umbrella w/ Skirts **(MAG-U RT)** $ 1,325.00
- HD DIT Tent **(MAG-U HD)** $ 1,245.00

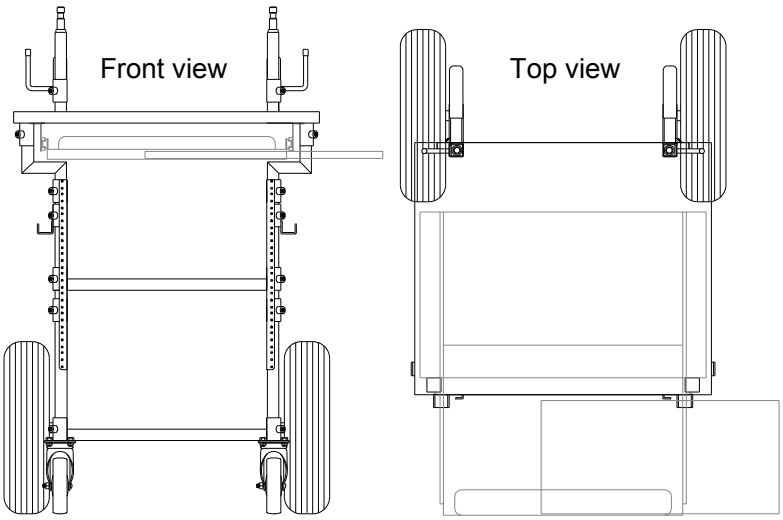

TR-01 EFX Transformer Cart (Cont.)

Accessories (Cont.):
- 9” Monitor Tray **(VA-01)** $ 175.00
- 13” Monitor Tray **(VA-02)** $ 185.00
- VPB Vertical Baby Riser (Adjustable) **(TR-01 VPR)** $ 251.00 (Includes one of each: MAG-LCD TH-LD BK, MAG-LCD MR-04, MAG-01 VPR-B ST, TR-01 Z)
- Mag LCD Tilter Head with 75/100mm VESA Plate (3-24 lbs.) **(MAG-LCD TH-LD BK)** $ 86.50
- Mag LCD Tilter Head with 75/100mm VESA Plate (20-35 lbs.) **(MAG-LCD TH-MD BK)** $ 119.00
- Mag LCD 4" Tilt Head Pin Adapter **(MAG-LCD MR-04)** $ 52.00
- Mag Baby Pin Riser **(MAG-01 VPR-B ST)** $ 73.50
- VPB Adapter to Mag Baby Pin Riser **(TR-01 Z)** $ 39.00

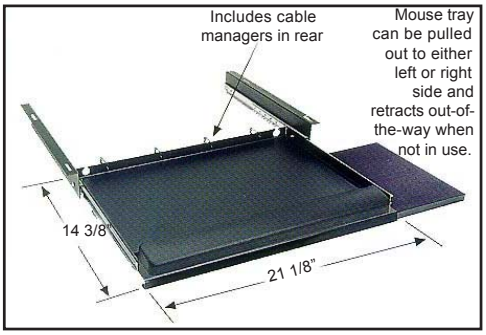

TR-01 MDKB Sliding Shelf w/ Keyboard & Mouse Tray $ 232.00

Options:
- K/B Mouse Slide Tray **(TR-01 MDKB)** $ 232.00
- 20" Knobby BMX Wheel Set (5/8 Bore) **(W-20 58X)** $ 162.00
- VPB 20" Wheel Axle Set **(TR-01 D20-X)** $ 90.75

Replacement parts:
- 5" Thermal Swivel Caster with Brake **(W-05 SCBRX)** $ 23.00
- 16” Pneumatic Wheel with 5/8” Bearings **(W-16 CC58X)** $ 120.00
- 16” Pneumatic Tire **(WA-16 CC TIRE)** $ 23.00
- 16” Pneumatic Tube **(WA-16 CC TUBE)** $ 9.75
- 5/8” Sealed Bearing **(WA-58 BR)** $ 2.75 (2) needed per wheel)

Shipping Dimensions: L33” x W25” x H25” (80 lbs.)
L83.8cm x W63.5cm x H63.5cm (36.4 kgs.)

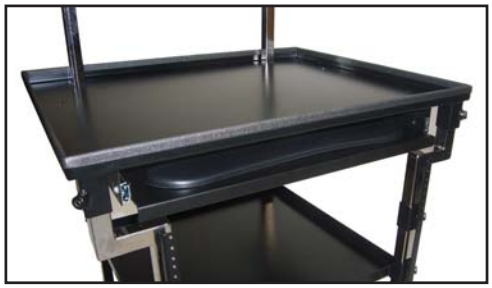
TR-01 MDKB Installed on TR-01 EFX Cart

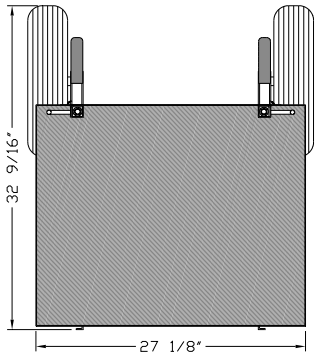

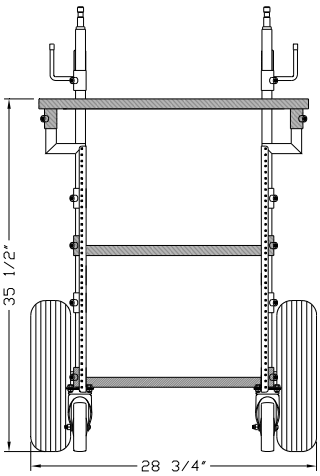

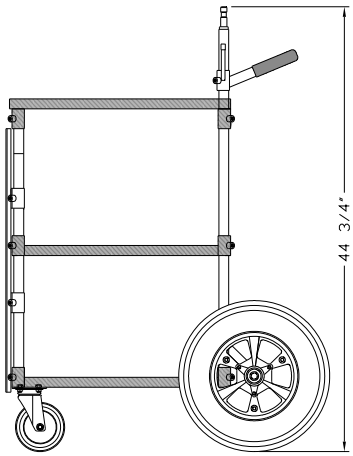

TR-01 EFX-8 Transformer Cart

Part No. TR-01 EFX-8

Sale Price: $ 1,425.00
Material: Steel
Color: Black
Max. Capacity: 500 lbs. / 227 kgs.
Weight: 65 lbs. / 29.6 kgs.
Dimensions: D33" x W29 1/2" x H44 1/2"
L83.8cm x W75cm x H113cm

TR-01 EFX shown with optional Sliding K/B & Mouse Tray, Nagra Tray, Sliding Shelf, 3-Space Sliding Drawer w/ lock & 9-Outlet Power Strip

Same as the TR-01 8 Transformer Cart but with the ability to install an optional Sliding K/B & Mouse Tray.
Cart is held together by four vertical posts which attach to a Bottom, Middle and Top Shelf by using telescopic locks operated with a 5/32 Allen wrench. All accessories are attached in the same manner. Middle Shelf, Handles, Rack Mounts and all available accessories can be adjusted to your desired height.
Additional Rack Mounts may be installed on rear section of cart for additional accessories
Custom size vertical poles may be ordered to change height of cart.

Features:
- Top Shelf (D22" x W22" x H1") (56cm x W56cm x H2.5cm)
- Middle Shelf (Adjustable) (D19 1/2" x W22" x H1") (L50cm x W56cm x H2.5cm)
- Bottom Shelf (D19 1/2" x W20" x H1") (L50cm x W51cm x H2.5cm)
- (2) Front Vertical Posts (L1 x W1" x H28") (L2.5cm x W2.5cm x H71.1cm")
- (2) Rear Vertical Posts (L1 x W1" x H39") (L2.5cm x W2.5cm x H99cm")
- (2) 5/8" Baby Pins accomodate Monitors, Monitor Trays and accessories
- (2) 19" Adjustable Rack Mounts (length 24 3/4") accomodate (14) Rack Mount spaces (1 Rack Mount space equals 1 3/4")
- (2) Handles with Cable Hooks
- (2) 5/8" Diameter Adjustable Axles
- Wheels: (2) 8" Pneumatic Swivel Casters with Brake & (2) 16" Pneumatic Cable Crawlers
- Transformer system, fully collapsible

Accessories:
- Loading Wheel Kit **(TR-01 LX)** $ 167.00
- 3" Cable Hook **(TR-01 CH3)** $ 26.00
- 6" Cable Hook **(TR-01 CH6)** $ 28.00
- VPB Trans 5/8" Baby Pin **(TR-01 S)** $ 35.00
- VPB 5/8" Baby Pin (Left) **(TR-01 S-L)** $ 52.00
- VPB 5/8" Baby Pin (Right) **(TR-01 S-R)** $ 52.00
- VPB Snap-On 5/8" Baby Pin **(TR-01 S-SO)** $ 81.00
  (See CAD drawing on page 115) **(Same as TR-01 S-L and TR-01 S-R, but can be installed without taking cart apart)**
- VPB 5/8" Baby Pin (Left) Set at 45 degrees **(TR-01 S-L 45)** $ 60.00
- VPB 5/8" Baby Pin (Right) Set at 45 degrees **(TR-01 S-R 45)** $ 60.00
- Mic Boom Grip & Base **(MAG-R2)** $ 37.00
- Mic Boom Grip & Base **(MAG-R4)** $ 39.00
- Drawer (2-space) latch & lock **(MAG-L2 PE-15)** $ 125.00
- Drawer (3-space) latch & lock **(MAG-L3 PE-15)** $ 135.00
- Drawer (4-space) latch & lock **(MAG-L4 PE-15)** $ 145.00
- Sliding Shelf with lock (1-space) **(TR-01 SS)** $ 232.00
- Sliding Shelf (2-space) **(TR-01 SS PE2)** $ 146.00
- Small K/B Slide Tray **(TR-01 KBSS)** $ 330.00
- K/B Mouse Slide Tray **(TR-01 MDKB)** $ 232.00
- Lap Top Drawer with Lock **(TR-01 LTD PE)** $ 124.00
- 9-Outlet Rack Power Strip **(TR-01 PD9)** $ 173.00
- 24" Rack Mount (Set) **(TR-01 R24X)** $ 86.50
- Umbrella **(MAG-U)** $ 297.00 (Canvas: White, Red, Black)
- Umbrella Holder **(MAG-UH)** $ 103.00
- VPB Cross Bar with 5/8" Baby Pin **(TR-01 S-CB)** $ 125.00
- Rain Tent Umbrella w/ Skirts **(MAG-U RT)** $ 1,325.00
- HD DIT Tent **(MAG-U HD)** $ 1,245.00

TR-01 EFX-8 Transformer Cart (Cont.)

Accessories (Cont.):
- 9” Monitor Tray **(VA-01)** $ 175.00
- 13” Monitor Tray **(VA-02)** $ 185.00
- VPB Vertical Baby Riser (Adjustable) **(TR-01 VPR)** $ 251.00 (Includes one of each: MAG-LCD TH-LD BK, MAG-LCD MR-04, MAG-01 VPR-B ST, TR-01 Z)
- Mag LCD Tilter Head with 75/100mm VESA Plate (3-24 lbs.) **(MAG-LCD TH-LD BK)** $ 86.50
- Mag LCD Tilter Head with 75/100mm VESA Plate (20-35 lbs.) **(MAG-LCD TH-MD BK)** $ 119.00
- Mag LCD 4" Tilt Head Pin Adapter **(MAG-LCD MR-04)** $ 52.00
- Mag Baby Pin Riser **(MAG-01 VPR-B ST)** $ 73.50
- VPB Adapter to Mag Baby Pin Riser **(TR-01 Z)** $ 39.00

Options:
- K/B Mouse Slide Tray **(TR-01 MDKB)** $ 232.00
- 20" Knobby BMX Wheel Set (5/8 Bore) **(W-20 58X)** $ 162.00
- VPB 20" Wheel Axle Set **(TR-01 D20-X)** $ 90.75

Replacement parts:
- 8" Pneumatic Swivel Caster Wheel with Brake **(W-08 SCBRX)** $ 53.50
- 16” Pneumatic Wheel with 5/8” Bearings **(W-16 CC58X)** $ 120.00
- 16” Pneumatic Tire **(WA-16 CC TIRE)** $ 23.00
- 16” Pneumatic Tube **(WA-16 CC TUBE)** $ 9.75
- 5/8” Sealed Bearing **(WA-58 BR)** $ 2.75 (2) needed per wheel)

Shipping Dimensions: (4) Boxes
L26” x W26” x H14” (51 lbs.)
L66cm x W66cm x H35.6cm (23.2 kgs.)
L31” x W25” x H6” (13 lbs.)
L78.7cm x W63.5cm x H15.2cm (5.9 kgs.)
L31” x W25” x H6” (17 lbs.)
L78.7cm x W63.5cm x H15.2cm (7.7 kgs.)
L5” x W5” x H45” (11 lbs.)
L12.7cm x W12.7cm x H114.3cm (5 kgs.)

TR-01 EFX-8 shown with optional Sliding K/B & Mouse Tray (TR-01 MDKB), Mag Lap Top Tray (MAG-LTP), Mag Swing Arm (MAG-LTA), VPB 5/8” Baby Pin (L) set at 45 degrees (TR-01 S-L 45), Mag Offset Arms (MAG-V OS), Mag-LCD 8” Tilt Head Pin Adapters (MAG-LCD MR-08), Mag LCD Tilter Head with 75/100mm VESA Plates (MAG-LCD TH-LD BK)

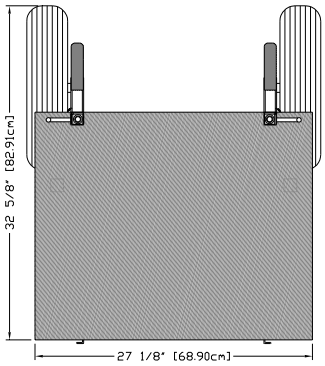

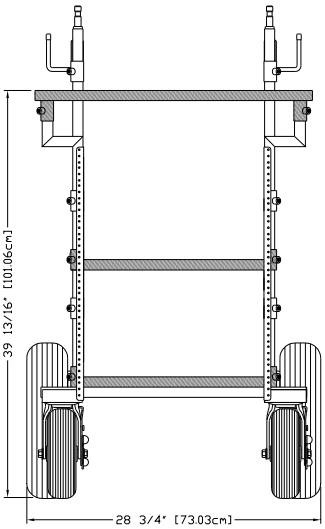

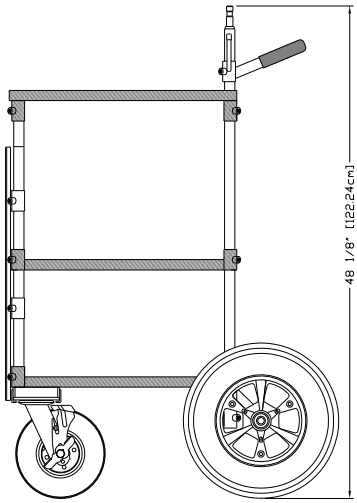

Mag LCD 75/100mm Tilt Head (MAG-LCD TH-LD BK) & Mag LCD 8” Tilt Head Pin Adapter (MAG-LCD MR-08) attached to TR-01 VPB Cart’s 5/8” Baby Pin

Action Dolly

Action Dolly

Style No. AD-01

Our latest addition is the Action Dolly. It works as a Doorway Dolly and Western Dolly. It is equipped with a Bungee Cam attachment, tripod holder and a Steady-cam post to be utilized for fast shots using a steady-cam. It can be set up for low camera angles for animal point of view
The Action Dolly has been used succesfully in major studios as well as rental houses around the world.

Action Dolly equipped with tripod

Includes:
- Tripod holder (3)
- Pull-out wheel ball pin (2)
- Wheel tension cable (2)
- Wheels: 4- 16” Pneumatic Tires
- Brake system
- Swivel Locking Wheels
- Seat
- Seat Riser
- Back Rest Unit
- Side Boards (2) (L27” x 5”) L68.6cm x 12.7cm)
- Round Extension 19 1/2” (49.5cm) (2)
- Square Extension 19 1/2” (49.5cm)
- Floor Board (L23.5” x W18.75”) (L59.7cm x W47.6cm)
- Upper Board (L8” x W15”) (L20.3cm x W38.1cm)

Optional equipment:
- Optional Garfield Mount
- Optional Bungee-cam unit
- Optional upper wide board (L8” x W20.5”)
- Optional 24” wide round extension (2)
- Optional 24” wide square extension

L43-48” x W20-35” x H42.5” 222 lbs.
L109.2-W121.9cm x W50.8-88.9cm x H108cm 100.9 kgs.

Sale Price $ 6,125.00 (Basic)
Sale Price $ 8,345.00 (Includes all options)

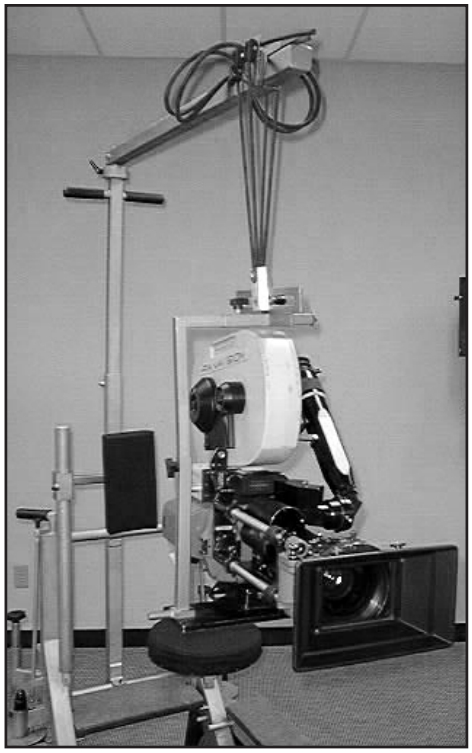

Action Dolly shown with Bungee-cam

Action Dolly Flight Case

Style No. AD-CASE

Flight Case $ 1,200.00
L50” x W25” x H47” 130 lbs. (352 lbs. with Dolly)
L127cm x W63.5cm x H119.4cm 59.1 kgs. (160 kgs. with Dolly)

Style No. AD-CASE MOB

Flight Case with wheels $ 1,325.00
L50” x W25” x H52” 141 lbs. (363 lbs. with Dolly)
L127cm x W63.5cm x H132cm 64.1 kgs. (165 kgs. with Dolly)

• Cameras and tripods courtesy of Panavision W.H.

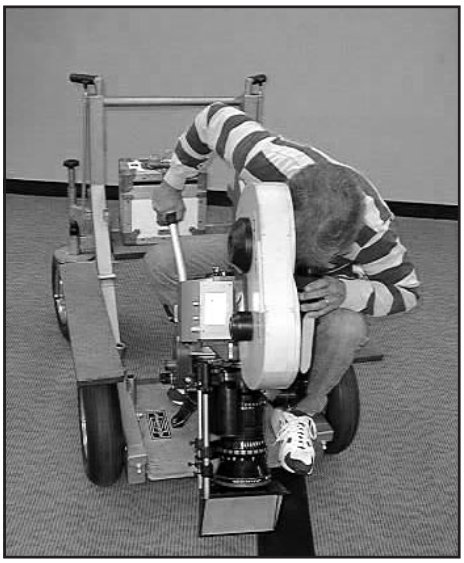

Action Dolly in low camera angle

Garfield Mount attached to Action Dolly **(MAG-SS GRF)** $ 750.00

Action Dolly Technical Specifications

ACTION DOLLY CAMERA OPTIONS:

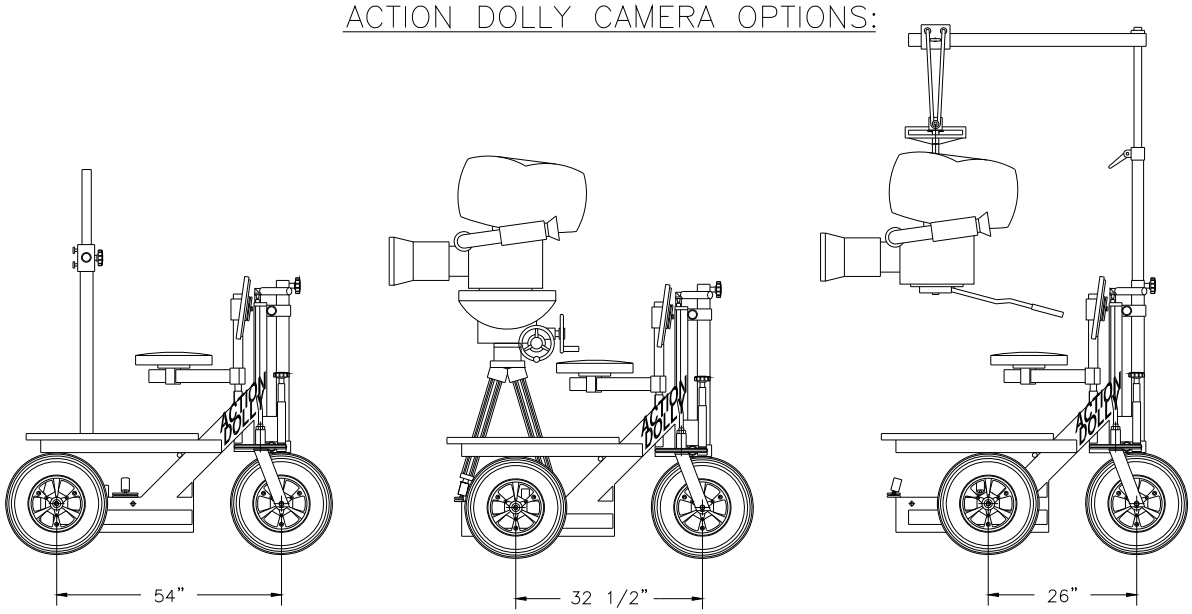

ACTION DOLLY WIDTH ADJUSTMENTS:

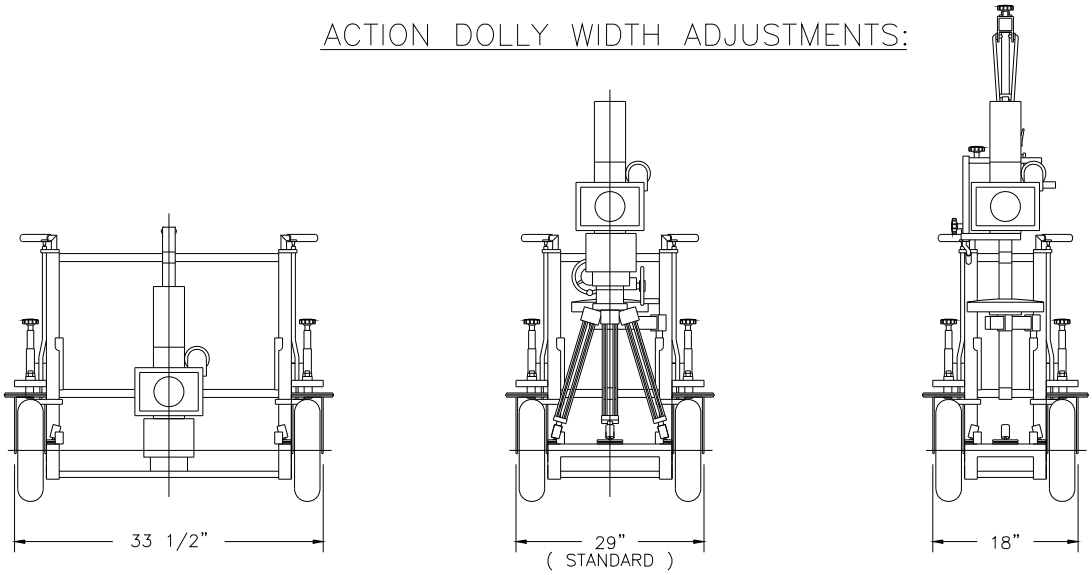

ACTION DOLLY TURNING RADIUS:

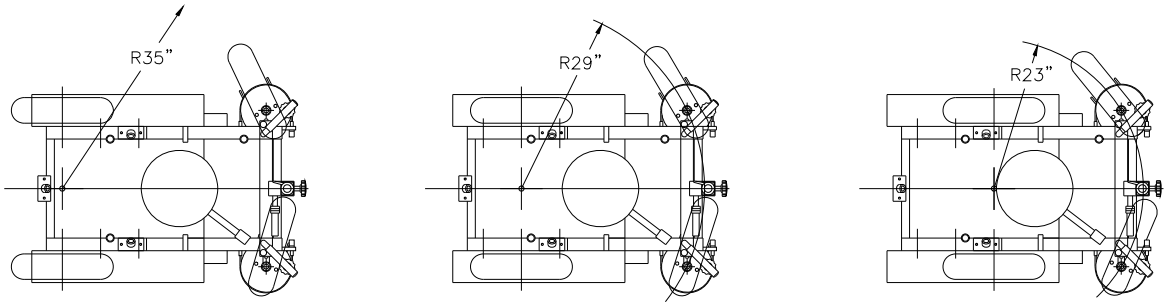

Backst age Equipment, Inc. Toll Free (800) 692-2787 • Tel (818) 504-6026 • Fax (818) 504-6180 • info@backstageweb.com • www.backstageweb.com

Shotsaver Dolly

Shotsaver Dolly

Style No. G-25

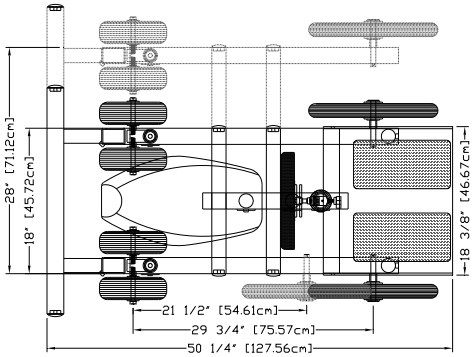

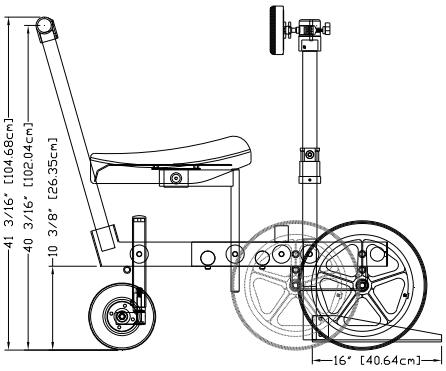

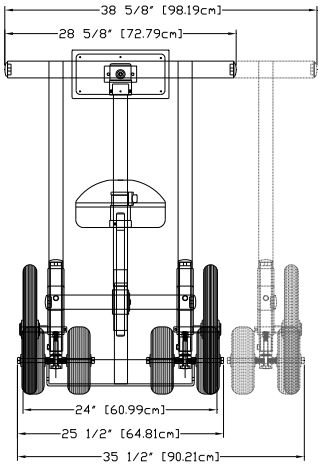

Includes:
- Wheels:
  - (2) 16" Pneumatic
  - (2) Dual 8" Pneumatic Swivel Casters
- Push/Pull Adjustable Handle
- Seat
- Front Rest Support with Pad
- Back Rest Support with Pad
- Aluminum Step-Off Platform Plate
- Main Center Post

L50 1/4" x W25 1/2 - 35 1/2" x H41 1/4" 122 lbs.
L127.6cm x W64.8cm - 90.2cm x H104.8cm 55.5 kgs.

Sale Price $ 4,750.00

Optional equipment:
- Optional Garfield Mount $ 750.00
- Optional Sand/Dune Wheel Kit $ 1,085.00
- Optional 16" Pneumatic Wheel $ 65.00 ea.
- Optional 20" Pneumatic Wheel $ 81.00 ea.
- Optional Axles for 16" & 20" Wheels $ 78.00 ea.

Shipping Dimensions:
L17" x W25" x H46" 135 lbs.
L43.2cm x W63.5cm x H116.8cm 61.4 kgs.

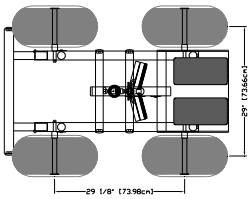

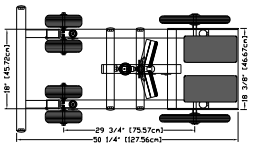

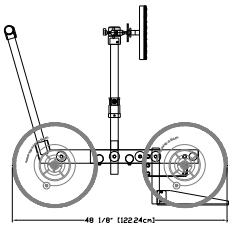

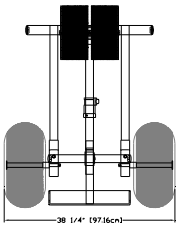

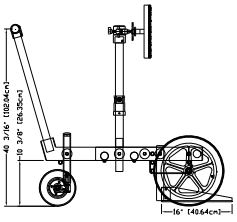

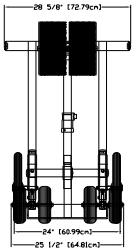

Optional Garfield Mount mounted on Center Post

Terms & Conditions

WARRANTY

All equipment and accessories manufactured by BACKSTAGE EQUIPMENT, INC. are warranted for life against defects. BACKSTAGE EQUIPMENT reserves the right to determine whether the equipment manufactured by BACKSTAGE EQUIPMENT is subject to the warranty or guarantee set forth by the manufacturer, and then only to the extent BACKSTAGE EQUIPMENT is able to enforce the warranty or guarantee.

TERMS

30-Days Net upon BACKSTAGE EQUIPMENT management credit approval. A monthly late charge of 1.5% or maximum allowable rate shall be added to all overdue amounts. Buyers account will be placed on hold if late charge is unpaid. If it becomes necessary to institute legal proceedings to collect this or any other account which you may have with BACKSTAGE EQUIPMENT, the prevailing party shall be entitled to the costs of collection, including reasonable attorney's fees. Title to all goods covered hereon shall not transfer to Buyer until full payment has been accepted by BACKSTAGE EQUIPMENT.

TRANSPORTATION

All items are FOB North Hollywood, CA, USA, with Buyer assuming responsibility for all shipping charges. BACKSTAGE EQUIPMENT'S responsibility ceases upon delivery of the shipment to the carrier. Any loss or damage occurring in transit is the responsibility of the carrier and Buyers are advised to immediately notify the carrier in writing of any such loss or damage.

PACKING

All packing and crating is subject to a 5% charge of the net price.

PRICES & SPECIFICATIONS

All prices and specifications are subject to change without notice. All applicable Federal excise, State and/or local taxes will be added to the purchase price.

RETURNS & DELIVERIES

Equipment returns are not accepted without written authorization from BACKSTAGE EQUIPMENT. Any returns are subject to a 20% restocking charge. All deliveries are based on normal conditions. BACKSTAGE EQUIPMENT assumes no responsibility for delays caused by fire, riots, acts of God, government orders, strikes, lockouts, available supply of raw materials, transportation facilities, or other causes affecting production or delivery beyond our reasonable control.

NOTES

All prices are in U.S. Dollars.

Backstage Equipment, Inc.

1st edition

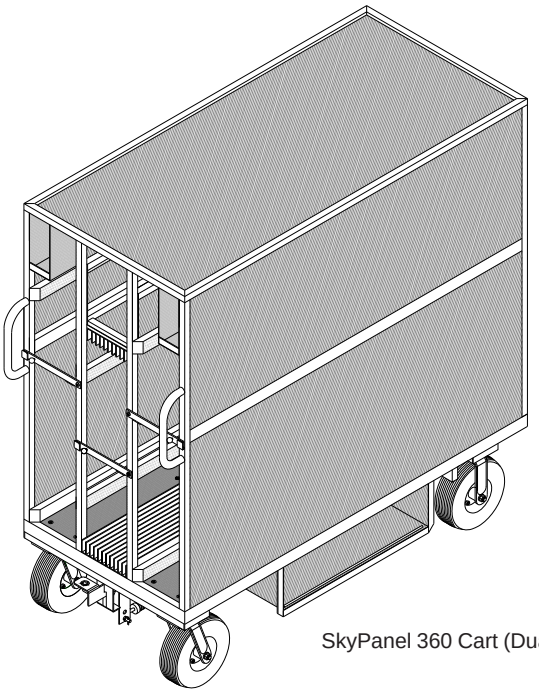

SkyPanel 360 Cart (Dual)

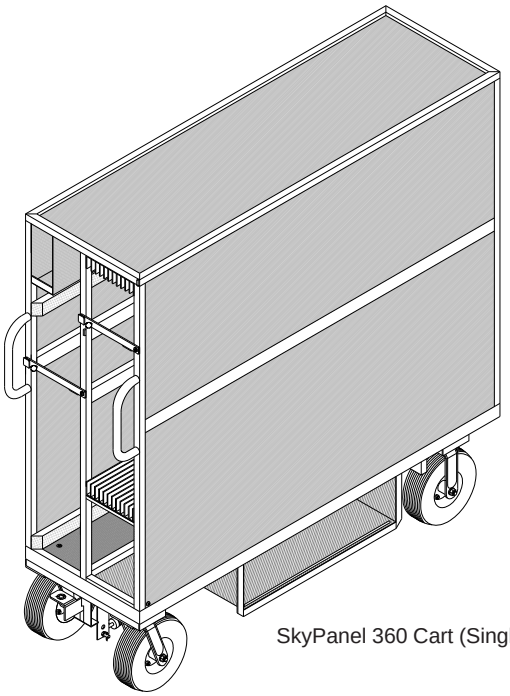

SkyPanel 360 Cart (Single)

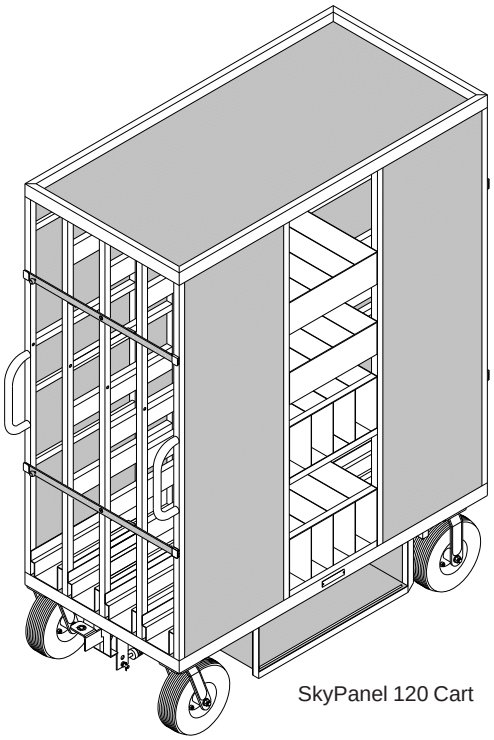

SkyPanel 120 Cart

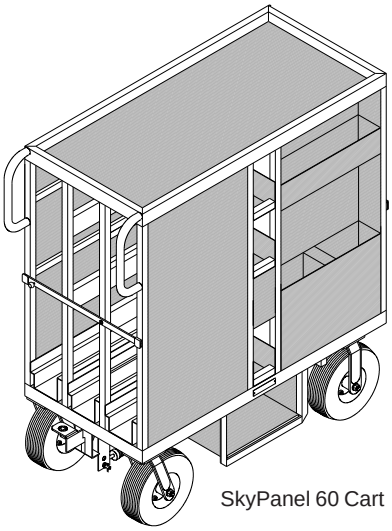

SkyPanel 60 Cart

Backstage Equipment, Inc. • 8052 Lankershim Bl. • North Hollywood, CA 91605 • USA

(800) 692-2787 • (818) 504-6026 • Fax (818) 504-6180 • E-mail info@backstageweb.com • www.backstageweb.com